RESOLUTION NO. R-52-2025

A RESOLUTION OF EAGLE MOUNTAIN CITY, UTAH, AUTHORIZING THE DISPOSAL OF SIGNIFICANT CITY-OWNED REAL PROPERTY PURSUANT TO EAGLE MOUNTAIN MUNICIPAL CODE CHAPTER 3.30

PREAMBLE

WHEREAS, the City Council of Eagle Mountain City, Utah is a public body with the authority to dispose of real property pursuant to the Eagle Mountain Municipal Code; and

WHEREAS, EMMC 3.30.060 provides the process for the disposal of significant real property, including a requirement for public notice, a public hearing, and evaluation by City staff and departments; and

WHEREAS, the City has received an application to dispose of parcel 59:044:0015, 2.15 acres, in exchange for the City taking possession of Parcel A, 2.32 acres, in the Marketplace at Eagle Mountain Town Center Preliminary Plat, Phase 4; and

WHEREAS, the exchange of property is identified in The Marketplace at Eagle Mountain Town Center Development Agreement, Paragraph 6, and

WHEREAS, City staff has reviewed the application and recommends the disposal; and

WHEREAS, all public notice requirements under EMMC 3.30.060 have been met, and

WHEREAS, the City Council held a public hearing on this matter and finds it in the best interest of the City and community to dispose of the Subject Property under the terms described below.

NOW, THEREFORE, be it resolved by the City Council of Eagle Mountain City, Utah, as follows:

1. The City Council hereby authorizes the disposal of parcel 59:044:0015, 2.15 acres, in exchange for the City taking possession of Parcel A, 2.32 acres, in the Marketplace at Eagle Mountain Town Center Preliminary Plat, Phase 4, as presented by City staff, as determined and approved by Council and depicted in Exhibit A.

This resolution shall become effective immediately upon its passing.

ADOPTED by the City Council of Eagle Mountain City, Utah, this 15th of July 2025.

EAGLE MOUNTAIN CITY, UTAH

Tom Westmoreland, Mayor

ATTEST:

Lacie Messerly
Deputy Recorder

CERTIFICATION

The above Resolution was adopted by the City Council of Eagle Mountain City, Utah on the 15th day of July, 2025.

Those voting yes:	Those voting no:	Those excused:	Those abstaining:
☑ Donna Burnham	☐ Donna Burnham	☐ Donna Burnham	☐ Donna Burnham
☑ Melissa Clark	☐ Melissa Clark	☐ Melissa Clark	☐ Melissa Clark
☑ Jared Gray	☐ Jared Gray	☐ Jared Gray	☐ Jared Gray
☐ Rich Wood	☐ Rich Wood	☑ Rich Wood	☐ Rich Wood
☑ Brett Wright	☐ Brett Wright	☐ Brett Wright	☐ Brett Wright

EAGLE MOUNTAIN 19 96 CORPORATE SEAL

Lacie Messerly

Lacie Messerly
Deputy Recorder

Exhibit A

The Marketplace at Eagle Mountain Town Center Phase 4

Vacating & Resubdividing Lot 2, The Marketplace at Eagle Mountain Town Center, together with more land, being a part of the Southwest Quarter of Section 12, Township 6 South, Range 2 West, Salt Lake Base and Meridian, U.S. Survey, Eagle Mountain City, Utah County, Utah 2025

Scale: 1" = 100'

100' 0 100' 200'

24-078 SUB P4

Narrative

This Subdivision was requested by Bill Gaskill to create 5 Lots, 1 Parcel and Public Road.

This Subdivision refraces and honors a previous 2016 Boundary/Topographical Survey by Focus Engineering and Surveying, LLC File No. 18-288 and a 2020 ALTA Survey by Anderson Wahlen and Associates.

A line between monuments found for the Southeast Corner and the East Quarter Corner of Section 12 was assigned the WGS derived bearing of North 0°22'12" East as the Basis of Bearings match NAD83 Utah Central Zone State Plane Datum reference to North.

Direct Communications

Direct Communications Cedar Valley, LLC certifies that it will provide telecommunications service to this subdivision utilizing the trenches provided by the developer as per the Direct Communications Cedar Valley P.S.C. Utah No. 1 Tariff.

Direct Communications _____ Date

First Digital

First Digital certifies that it will provide telecommunications service to this subdivision utilizing the trenches provided by the developer.

First Digital _____ Date

Enbridge Gas Utah

Questar Gas Company, dba Enbridge Gas Utah, hereby approves this plat solely for the purposes of confirming that the plat contains public utility easements. Enbridge Gas Utah may require additional easements in order to serve this development. This approval does not constitute abrogation or waiver of any other existing rights, obligations or liabilities including prescriptive rights and other rights, obligations or liabilities provided by law or equity. This approval does not constitute acceptance, approval or acknowledgement of any terms contained in the plat, including those set forth in the Owner Dedication or in the Notes, and does not constitute a guarantee of particular terms or conditions of natural gas service. For further information please contact Enbridge Gas Utah's Right-of-Way Department at 800-366-8532.

QUESTAR GAS COMPANY
dba ENBRIDGE GAS UTAH

APPROVED THIS____ DAY OF _____, 20___.

BY- _____

TITLE- _____

Rocky Mountain Power

1. Pursuant to Utah Code Ann. 54-3-27 this plat conveys to the Owner(s) or operators of utility facilities a public utility easement along with all the rights and duties described therein.
2. Pursuant to Utah Code Ann. 10-9a-603 Rocky Mountain Power accepts delivery of the PUE as described in this plat and approves this plat solely for the purpose of confirming that the plat contains Public Utility Easements and approximates the location of the Public Utility Easements, but does not warrant their precise location. Rocky Mountain Power may require other easements in order to serve this development. This approval does not effect any right that Rocky Mountain Power has under:

a. A recorded easement or Right-of-Way
b. the law applicable to prescriptive rights
c. Title 54, Chapter 8a, damage to underground utility facilities or
d. Any other provision of law

Approved this_____day of_____, 20___.

Rocky Mountain Power Company

By- _____

Title- _____

Calculations Table

Total Acreage	= 16.557 acres
Total Acreage in Lots after dedications and less Parcel A	= 13.641 acres
Total Acreage in Parcel A	= 2.322 acres
Average Lot size	= 118,850 sq. ft. or 2.728 acres
Largest Lot size	= 6.235 acres
Smallest Lot size	= 0.690 acres
Total Number of Lots	= 5 Lots and 1 Parcel
Total Acreage in Right-of-Way	= 0.593 acre

Acknowledgment

State of
County of } ss

On the _____ day of _____, 20____, personally appeared before me, the undersigned Notary Public, Tiffany Walden, who being by me duly sworn did say that she is the Manager of Diamante Vista, LLC a Utah limited liability company, which is the Manager of EM Commercial Development, LLC a Utah limited liability company, by authority of its members or its articles of organization, and she acknowledged to me that said limited liability company executed the same.

Notary Public Full Name: _____
Commission Number: _____
My Commission Expires: _____

Acknowledgment

State of
County of } ss

On the _____ day of _____, 20____, personally appeared before me, the undersigned Notary Public, Donald Mark Ridley, who being by me duly sworn did say that he is a General Partner of CJM limited liability limited partnership by authority of its members or its articles of organization, and he acknowledged to me that said limited liability limited partnership executed the same.

Notary Public Full Name: _____
Commission Number: _____
My Commission Expires: _____

AWA
2010 North Redwood Road, Salt Lake City, Utah 84116
(801) 521 8529 AWAengineering.net

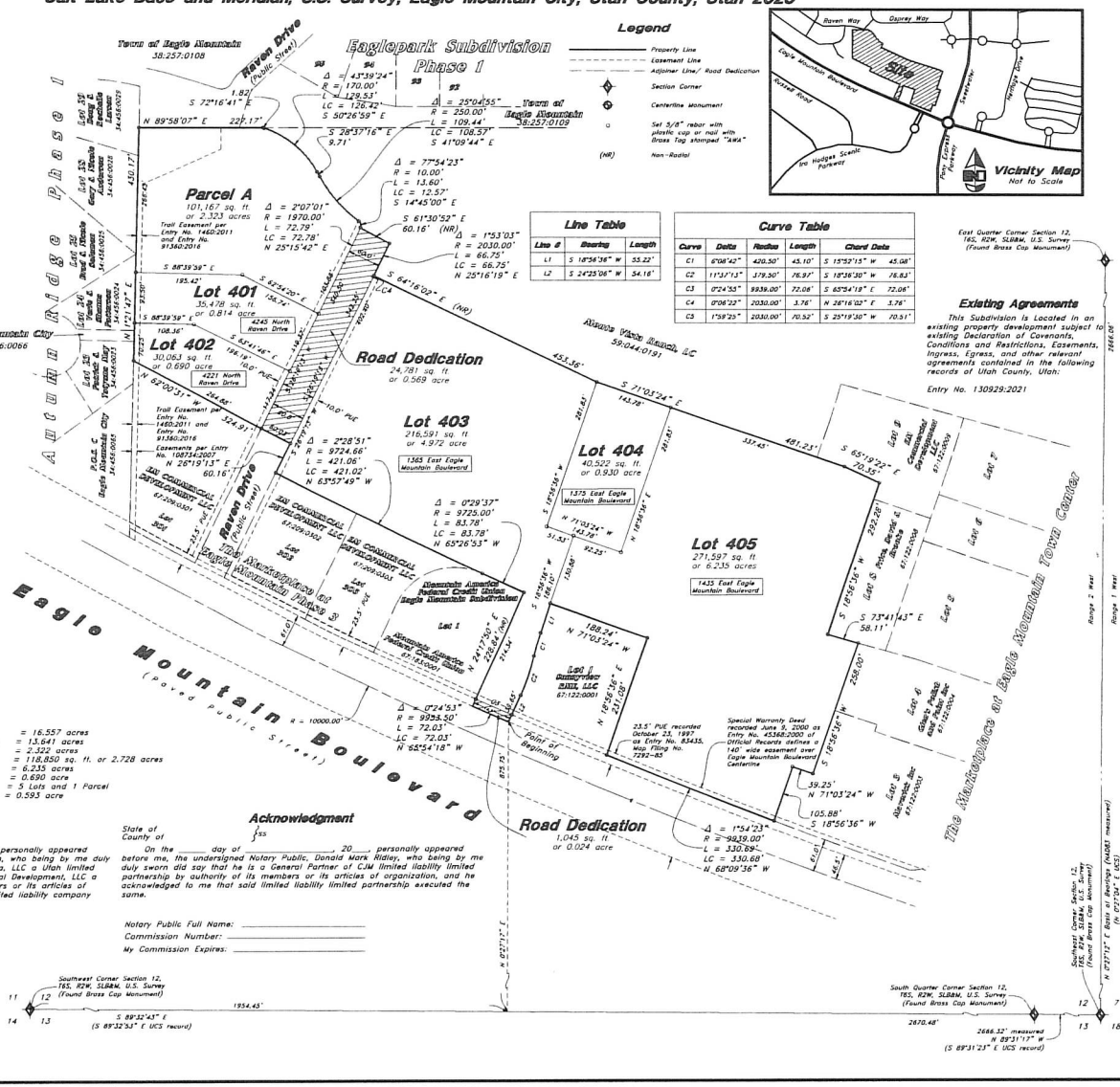

Legend

- Property Line
- Easement Line
- Adjoiner Line/ Road Dedication
- Section Corner
- Centerline Monument
- Set 5/8" rebar with plastic cap or nail with Brass Tag stamped "AWA"
- (NR) Non-Radial

Line Table

Line #	Bearing	Length
L1	S 18°56'36" W	55.22'
L2	S 24°25'06" W	54.16'

Curve Table

Curve	Delta	Radius	Length	Chord Data	
C1	6°08'42"	420.50'	45.10'	S 15°52'15" W	45.08'
C2	11°37'13"	379.50'	76.97'	S 18°36'30" W	76.83'
C3	0°24'55"	9939.00'	72.08'	S 65°54'19" E	72.06'
C4	0°06'22"	2030.00'	3.76'	N 26°16'02" E	3.76'
C5	1°59'25"	2030.00'	70.52'	S 25°19'30" W	70.51'

Existing Agreements

This Subdivision is Located in an existing property development subject to existing Declaration of Covenants, Conditions and Restrictions, Easements, Ingress, Egress, and other relevant agreements contained in the following records of Utah County, Utah:

Entry No. 130929:2021

Surveyor's Certificate

I, David M. Hamilton, do hereby certify that I am a Professional Land Surveyor in the State of Utah and that I hold License No. 12966234 in accordance with Title 58, Chapter 22, of the Professional Engineers and Land Surveyors Licensing Act; I further certify for, and on behalf of AWA that by authority of the Owners I have completed a survey of the property described on this Subdivision that in accordance with Section 17-23-17 and have verified all measurements; that the reference monuments shown on this plat are located as indicated and are sufficient to retrace or reestablish this plat, and that the information shown herein is sufficient to accurately establish the lateral boundaries of the herein described tract of real property; hereafter known as Eagle Mountain Town Center Phase 4.

Boundary Description

All of Lot 2 of The Marketplace at Eagle Mountain Town Center recorded as Entry No. 127110:2021 and as Map File No. 17808 in the Official Records of Utah County, together with (Phase 1) more land, being a part of the Southwest Quarter of Section 12, Township 6 South, Range 2 West, Salt Lake Base and Meridian, U.S. Survey, in Eagle Mountain City, Utah County, Utah:

Beginning at a point on the Northeasterly line of Eagle Mountain Boulevard as it exists at 46.50 foot half-width, located 1954.45 feet South 89°32'43" East along the South line of said Section 12; and 825.75 feet North 0°27'17" East from a Brass Cap Monument found marking the Southwest Corner of said Section 12; and running thence Northwesterly along the arc of a 9953.50 foot radius curve to the right a distance of 72.03 feet (Center bears North 23°53'16" East, Central Angle equals 0°24'53" and Long Chord bears North 65°54'18" West 72.03 feet) along said Northeasterly line to the most Southerly Corner of the Mountain America Federal Credit Union Eagle Mountain Subdivision recorded as Entry No. 56443:2023 and as Map File No. 18902 in the Official Records of Utah County; thence along the Southeasterly and Northeasterly lines of said Subdivision the following two courses: North 24°17'50" East 228.84 feet (along a non-radial line to the most Easterly corner thereof) and Northwesterly along the arc of a 9725.00 foot radius curve to the right a distance of 83.78 feet (Center bears North 24°18'19" East, Central Angle equals 0°29'37" and Long Chord bears North 65°26'53" West 83.78 feet) to the most Easterly Corner of the Marketplace at Eagle Mountain Town Center Phase 3 recorded as Entry No. 61509:2024 and as Map File No. 19387; thence along the Northeasterly line of said Phase 3 the following three courses: Northwesterly along the arc of a 9724.66 foot radius curve to the right a distance of 421.06 feet (Center bears North 24°47'46" East, Central Angle equals 2°28'51" and Long Chord bears North 63°57'49" West 421.02 feet) to the Southerly line of Raven Drive as dedicated per said Plat; North 28°13'13" East 60.16 feet along said Southerly line; and North 62°00'31" West 324.91 feet to the Easterly line of Autumn Ridge Phase 1 recorded as Entry No. 108734:2007 and as Map File No. 12583 in the Official Records of Utah County; thence North 17°21'47" East 430.17 feet along said Easterly line to the intersection thereof with the Southerly line of Eagle Mountain Eaglepark Subdivision Phase 1 recorded as Entry No. 34958 and as Map File No. 7492 in the Official Records of Utah County; thence North 89°58'07" East 227.17 feet along said Southerly line of Eaglepark Subdivision Phase 1 recorded as Entry No. 34958 and as Map File No. 7492; thence South 72°16'41" East 1.82 feet to a point of curvature; thence Southeasterly along the arc of a 170.00 foot radius curve to the right a distance of 129.53 feet (Central Angle equals 43°39'24" and Long Chord bears South 50°26'59" East 126.42 feet) to a point of tangency; thence South 28°37'16" East 9.71 feet to a point of curvature; thence Southeasterly along the arc of a 250.00 foot radius curve to the left a distance of 109.44 feet (Central Angle equals 25°04'55" and Long Chord bears South 41°09'44" East 108.57 feet) to a point of reverse curvature; thence along the arc of a 10.00 foot radius curve to the right a distance of 13.60 feet (Central Angle equals 77°54'23" and Long Chord bears South 14°45'00" East 12.57 feet); thence South 61°30'32" East 60.16 feet along a non-radial bearing to a point on a curve; thence Southwesterly along the arc of a 2039.87 foot radius curve to the right a distance of 66.78 feet (Center bears North 63°40'08" West, Central Angle equals 1°52'30" and Long Chord bears South 25°16'08" West 66.75 feet); thence South 64°16'02" East 453.36 feet; thence South 71°03'24" East 481.23 feet to and along the Southwesterly line of Lot 9 of said Phase 1 Subdivision; thence along the Southerly, Westerly and Northerly lines of Lots 9, 8, 6 and 3 of said Phase 1 Subdivision the following six courses: South 65°19'22" East 70.35 feet; South 18°56'36" West 292.28 feet; South 73°41'43" East 58.11 feet; South 18°56'36" West 256.00 feet; North 71°03'24" West 39.25 feet; and South 18°56'36" West 105.88 feet to a point on a curve on the Northerly line of Eagle Mountain Boulevard as dedicated to 61.00 foot half-width; thence Northwesterly along the arc of a 9938.00 foot radius curve to the left a distance of 330.68 feet (Center bears North 20°53'13" East, Central Angle equals 1°54'23" and Long Chord bears North 68°09'36" West 330.68 feet) to the Southeasterly corner of Lot 1 of said Phase 1; thence along the Easterly, Northerly and Westerly lines and Southerly extension of said Westerly line of said Lot 1 the following six courses: North 18°56'36" East 231.08 feet to the Northeast corner of said Lot 1; North 71°03'24" West 188.24 feet to the Northwest corner of said Lot 1; South 18°56'36" West 55.22 feet to a point of curvature; Southwesterly along the arc of a 420.50 foot radius curve to the left a distance of 45.10 feet (Central Angle equals 6°08'42" and Long Chord bears South 15°52'15" West 45.08 feet) to a point of reverse curvature; Southwesterly along the arc of a 379.50 foot radius curve to the right a distance of 76.97 feet (Central Angle equals 11°37'13" and Long Chord bears South 18°36'30" West 76.84 feet) to a point of tangency; and South 24°25'06" West 54.16 feet to the point of beginning.

Contains 721,244 sq. ft. or 16.557 acres
5 Lots
1 Parcel
and Public Road

Date: _____

David M. Hamilton
Utah PLS No. 12966234

Owner's Dedication

We, the undersigned Owners of all the real property depicted on this plat described in the Surveyors Certificate on this plat, have caused the land described on this plat to be divided into 5 Lots, easements and other public uses as designated on the plat and now do hereby dedicate under the provisions of 10-9a-607, Utah Code, without condition, restriction or reservation to Eagle Mountain City, Utah, all streets, water, sewer and other utility easements and improvements, open spaces shown as public open spaces, parks and all other places of public use and enjoyment to Eagle Mountain City, Utah together with all improvements required by the Development Agreement between the undersigned and Eagle Mountain City for the benefit of the City and the inhabitants thereof.

In witness whereof we have hereunto set our hands this_____, day of _____, A.D. 20____.

EM Commercial Development, LLC a Utah limited liability company

by: Its Co-Manager: CP EM, LLC, a Utah limited liability Company
by: William Gaskill
Its: Manager

by: Its Co-Manager: Diamante Vista, LLC, a Utah limited liability Company
by: Tiffany Walden
Its: Manager

CJM Limited Liability Limited Partnership

by: Donald Mark Ridley
Its: General Partner

Acknowledgment

State of
County of } ss

On the _____ day of _____, 20____, personally appeared before me, the undersigned Notary Public, William Gaskill, who being by me duly sworn did say that he is the Manager of CP EM, LLC a Utah limited liability company which is the Manager of EM Commercial Development, LLC a Utah limited liability company, by authority of its members or its articles of organization, and he acknowledged to me that said limited liability company executed the same.

Notary Public Full Name: _____
Commission Number: _____
My Commission Expires: _____

Acceptance by Legislative Body

The City Council of Eagle Mountain City, County of Utah, Approves this Subdivision and hereby accepts the dedication of all streets, easements, and other parcels of land intended for public purposes for the perpetual use of the public this____ day of _____, 20____.

Approved by Mayor _____ Approved by City Attorney _____

Approved by City Engineer _____ Attest by City Recorder (See Seal Below)

The Marketplace at Eagle Mountain Town Center Phase 4

A part of the Southwest Quarter of Section 12, Township 6 South, Range 2 West, Salt Lake Base and Meridian, U.S. Survey, Eagle Mountain City, Utah County, Utah

SURVEYORS SEAL	NOTARY PUBLIC SEAL	CITY ENGINEER SEAL	CLERK-RECORDER SEAL
PROFESSIONAL LAND SURVEYOR 12966234 David M. Hamilton STATE OF UTAH			

The Marketplace at Eagle Mountain Town Center Phase 4

Northwest Corner of Eagle Mountain Blvd & Pony Express
Eagle Mountain, Utah, 84005

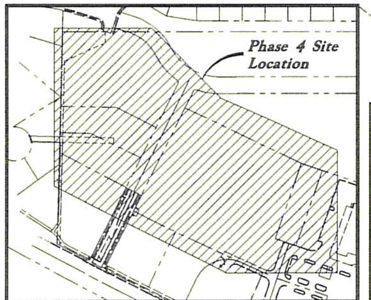

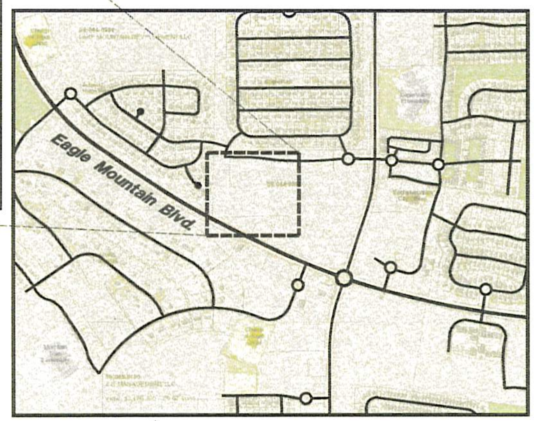

Vicinity Map
Not to Scale

Abbreviations

BCR	Begin Curb Return	PP	Power Pole
BOL	Bollard	PT	Point of Tangency
BRW	Finish Grade - Bottom of Retaining Wall	PVC	Polyvinyl Chloride
CATV	Cable Television Box	PVI	Point of Vertical Intersection
CB	Catch Basin	RCP	Reinforced Concrete Pipe
CMP	Corrugated Metal Pipe	RD	Roof Drain
COB	Cleanout Box	SB	Signal Box
COTG	Cleanout to Grade	SD	Storm Drain
EA	Edge of Asphalt	SDMH	Storm Drain Manhole
EB	Electrical Box	SMH	Sewer Manhole
EC	End of Curve	SP	Signal Pole
ECR	End Curb Return	SS	Sanitary Sewer
FF	Finished Floor	SVZ	Sight Visibility Zone
g	Ground	SW	Secondary Water
GB	Grade Break	TA	Top of Asphalt
GM	Gas Meter	TB	Telephone Box
HB	Hose Bib	TBC	Top Back of Curb
HP	High Point	TG	Top of Grate
I	Irrigation Line	TMH	Telephone Manhole
ICB	Irrigation Control Box	TP	Top of Concrete
Lip	Lip of Gutter	TRW	Finish Grade - Top of Retaining Wall
LP	Light Pole	TW	Top of Walk
MH	Manhole	VC	Vertical Curve
Mon	Monument	VPC	Vertical Point of Curve
PC	Point of Curvature	VPT	Vertical Point of Tangency
PCC	Point of Compound Curvature	WL	Waterline
PI	Point of Intersection	WP	Working Point
PM	Power Meter	WV	Water Valve

Legend

Proposed Curb & Gutter		Existing Improvements	
Proposed Open Face C & G		Existing Asphalt	
Proposed Asphalt		Existing Concrete	
Proposed Concrete		Existing Inlet Box	
Proposed Truncated Domes		Existing Catch Basin	
Proposed Inlet Box		Existing Manhole	
Proposed Catch Basin		Existing Fire Hydrant	FH
Proposed Manhole		Existing Water Valve	WV
Proposed Transformer	T	Existing Overhead Power Line	
Proposed Meter Box		Existing Water	W
Proposed Water Meter		Existing Secondary Water	SW
Proposed Combo Box		Existing Sewer	S
Proposed Fire Hydrant		Existing Storm Drain	SD
Proposed Water Valve		Existing Gas	G
Proposed Water Line	W	Existing Power	P
Proposed Sanitary Sewer	S	Existing Telephone	T
Proposed Storm Drain		Existing Fence	X
Proposed Conduit Line	C	Flowline	
Proposed Power Line	P	Centerline	
Proposed Gas Line	G	Existing Contour	
Proposed Fire Line	F	Existing Spot	
Proposed Secondary Water Line	SW	Existing Light Pole	
Proposed Roof Drain	RD	Existing Street Light	
Proposed Fence	X	Existing Building	
Ridge line	R	Existing Telephone Box	TB
Grade Break	GB	Existing Power Meter	PM
Proposed Contour	78	Existing Electrical Box	EB
Direction of Drainage		Existing Electrical Cabinet	ECAB
Proposed Spot	78.00TA	Existing Gas Meter	GM
ADA Accessible Route		Existing Water Meter	WM
Property Line		Existing Irrig. Control Box	ICB
Sawcut Line		Existing Bollard	BOL
Proposed Light Pole		Existing Hose Bib	HB
Proposed Street Light		Working Point	
Proposed Building		Existing Deciduous Tree	
Existing Power Pole		Existing Coniferous Tree	
Existing Power Pole w/ Guy		Detail Number	xx
Existing Utility Marker		Sheet Number	xx
Existing Post			

Civil Sheet Index

C0.0	Cover Sheet
1	Subdivision Plat
C0.1	Demolition Plan
C1.1	Overall Site Plan
C2.1	Drainage Plan
C3.1	Plan & Profile
C3.2	Raven Drive Striping Plan
C3.3	Grading Details
C3.4	Streetlight Plan
C4.1	Details
C4.2	Details
C5.1	Erosion Control Plan - Phase 1
C5.2	Erosion Control Plan - Phase 2
C5.3	Erosion Control Details
L1.1	Landscape Plan
L2.1	Irrigation Plan
L3.1	Landscape & Irrigation Details

Eagle Mountain City General Notes

SEWER
- Pipe bedding: ¾" gravel required 6" below, on the sides & 12" above the pipe (minimum)
- Depth: Sewer main/laterals to maintain 4' of cover (minimum) from finished grade, 3' minimum from top of pipe at time of installation
- Separation: sewer mains & laterals to maintain 10' separation (minimum) from culinary water mains & laterals.
- Sewer Y's: 3' minimum separation between sewer Y's.
- Lateral stubs: A) stubs must extend 15' into property and be marked with 2x4 painted green. B) All laterals must be GIS (shot in) at the Y's and stubs. Also slopes (2% min. on 4" pipe) to be checked before backfill.
- Manholes: manholes to be within 1' of finished grade. 12" of whirly gig form (max) and no flat rings allowed. 12" of ¾" gravel required under manholes/boxes.

WATER
- Valves: 1. Valves must be flanged to tee's (fittings). 2. Valves 12" and larger to be butterfly valves.
- Bedding: sand must meet AASHTO (A-3) gradation with 100% passing the #4 sieve. 6" below pipe on the sides & 12" above pipe (minimum).
- Depth: water main & laterals must maintain 4' cover from finished grade (minimum), 3' minimum from top of pipe at time of installation. Max depth 72" from finished grade.
- Services & fittings: services & fittings to maintain 3' minimum separation from pipe joints and other fittings.
- Setters: all setters to be 21" tall (minimum), have unions at the base and be dual check model, also ¾" setters to have double braces. Setters to be set at: 18" to 22" from the top of setter to top of lid.
- Water can lid: all lids to say 'Eagle Mountain' on them recessed with a hole for the ERT and to be set at level to 1" above the plane of the curb & sidewalk.
- Water Can: the water can for ¾" & 1" services will need to be a 36" tall minimum and 21" inside diameter. Water can for 1-1/2" to 2" service will need to follow APWA specification.
- Hydrants: hydrants to be 5' bury (minimum).
- Laterals: all laterals need to be GIS (shot in) at the corp. stop & setter, and also visual inspection on poly inserts before backfill. Water laterals to extend 15' into property and be marked with a 2x4 painted blue. All poly lines to have visual poly insert inspection.
- Tracer wire: run tracer wire along main & extend up setters and hydrants, do not run up valve boxes.
- Water fittings: all water fittings to be checked for thrust blocks (pre & post) and GIS (shot in) before backfill.
- Vertical separation: water main to maintain 18" minimum separation from storm drain or other obstacles/utilities.
- Water line fittings: all fittings to have mega lug followers.
- Water Main Line: NO DEFLECTION or bending of pipe will be allowed in the water lines and bend fittings will be required. All fittings to be Mega-lug fittings.

STORM DRAIN
- Bedding: ¾" gravel 6" below and on sides of pipe & 12" above pipe (minimum).
- ADS: all ADS pipe to be 'HP' brand.
- Collars: collars to be 1'x1' around pipe, 4000 psi concrete, inspection is needed pre & post collar pour.
- Manholes: manholes to be within 1' of finished grade. 12" of whirly gig form (max) and no flat rings allowed. 12" of ¾" gravel required under manholes/boxes.

ROAD SECTION
- Proof rolls: proof roll required on all sections of road: i.e. sub-grade, sub-base, and curb base and road base. Curb stakes required for sub-grade inspection and string line required for sub-base and road base inspection.
- UTBC: state spec. road base required for all roads, commercial base acceptable for the sidewalks & trails.
- Collars: all collars to be 1' wide by 1' deep with a 6000 psi concrete with 1.5# fiber mesh per cubic yard (3/4" monofilament) required for all street collars. Manhole covers and water valve towers to be ½" down from asphalt edge and concrete to be ¼" to 3/8" down from asphalt edge.

Flood Zone

This property lies entirely within Flood Zone X as designated on FEMA Flood Insurance Rate Map for Eagle Mountain, Utah County, Utah and Incorporated Areas Map Number 49049C0275F dated 19 June, 2020 (Not Printed). Flood Zone X is defined as "Areas determined to be outside the 0.2% annual chance floodplain."

Basis of Bearings

A line between monuments found for Southeast Corner and the East Quarter Corner of Section 12 was assigned the Utah County Survey bearing of North 0°27'04" East as the Basis of Bearings to place the Survey on State Plane Basis.

Benchmark

Brass Cap Monument for the South Quarter Corner of Section 12, T6S, R2W, SLB&M Assigned elevation using GPS methods
Elevation = 4865.18 feet
Utah County Surveyor Tie Sheet, Published 2 April, 2002 Observed 16 September, 2020

REV	DATE	DESCRIPTION

Designed by: SY
Drafted by: JW
Client Name:
EM Commercial, LLC
24-078 CV

AWA
2010 North Redwood Road, Salt Lake City, Utah 84116
(801) 521-8529 - AWAengineering.net

Cover Sheet

The Marketplace at Eagle Mountain Town Center Phase 4
Eagle Mountain Boulevard & Pony Express Parkway
Eagle Mountain, Utah

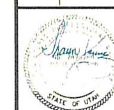

26 Jun, 2025

SHEET NO.
C0.0

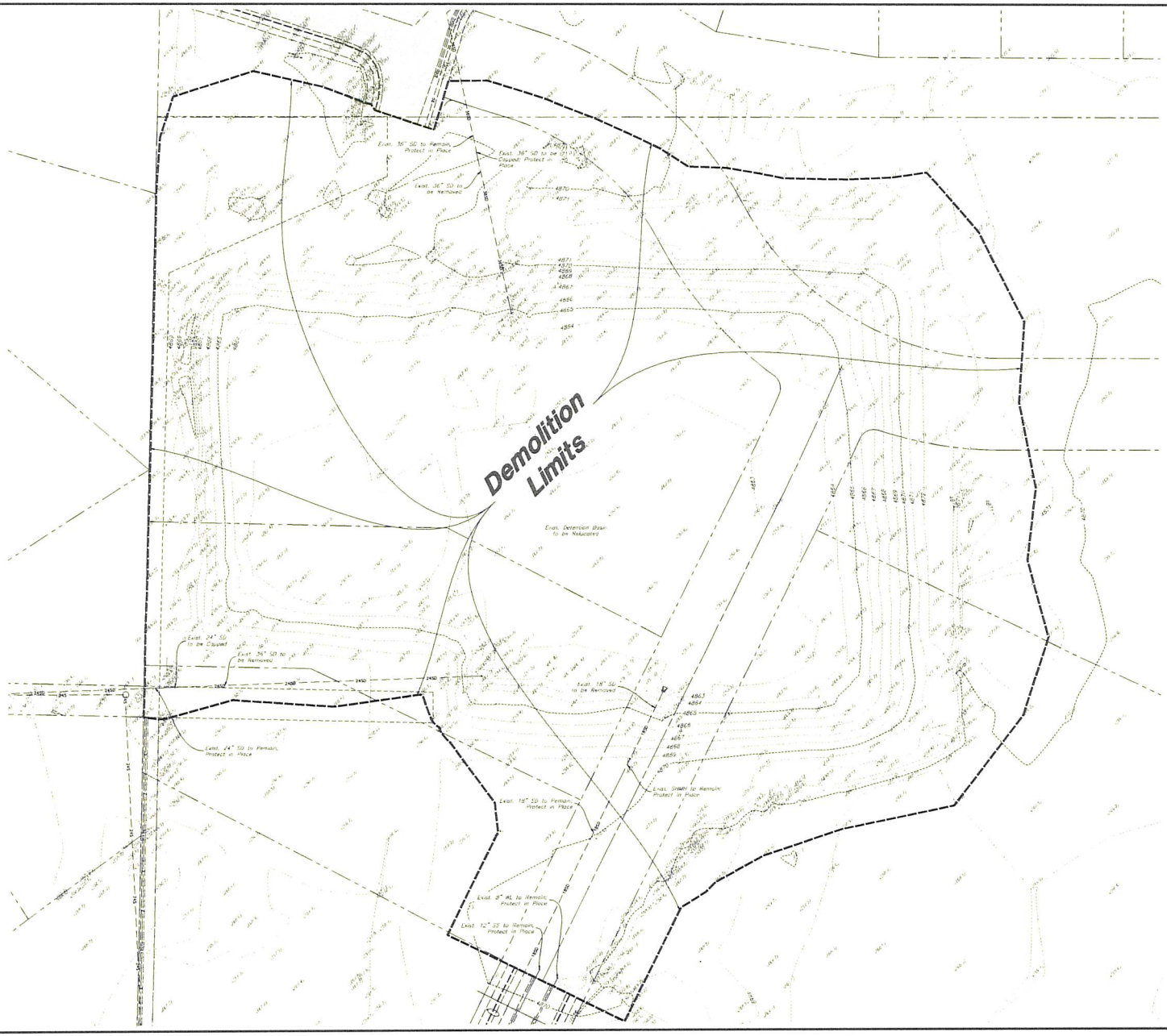

Scale: 1" = 30'

30' 0 30' 60'

General Demolition Notes:

1. Demolition and site clearing for this contract are to include all areas shown within demolition limits or by note.
2. Refer to site improvement plans for more details on limits of removal.
3. All curbs, gutters, walks, slabs, walls, fences, flatwork, asphalt, waterlines and meters, gas lines, sewer lines, light poles, buried cables, storm drain piping and structures within the demolition limits to be cleared from site unless otherwise shown.
4. All utilities, sewer, water, gas, telephone and electrical services to be disconnected and capped according to city, county and utility company requirements, unless otherwise shown.
5. Excavated areas to be backfilled with clean granular material compacted to 95% of maximum lab density as determined by ASTM D 1557. (Test results to be given to owner) Excavated areas should be backfilled per the geotechnical report prepared for the project.
6. Clear and grub trees, shrubs, and vegetation within demolition limits, disposal to be off-site except where noted otherwise.
7. DO NOT interrupt any services or disrupt the operation of any businesses shown outside the demolition limits.
8. Remove debris, rubbish, and other materials resulting from the demolition and site clearing operations from the site and dispose of in a legal manner.
9. The location and/or elevation of existing utilities as shown on these plans is based on records of the various utility companies and, where possible, measurements taken in the field. The information is not to be relied upon as being exact or complete. Contractor shall contact authorities having jurisdiction for field locations. Contractor shall be responsible for protection of in place and relocated utilities during construction.
10. Stockpiles shall be graded to maintain slopes not greater than 3 horizontal to 1 vertical. Provide erosion control as needed to prevent sediment transport to adjacent drainage ways.
11. Contractor shall be responsible for disposal of all waste material. Disposal shall be at an approved site for such material. Burning onsite is not permitted.
12. Contractor shall verify with city any street removal, curb cuts, and any restoration required for utility line removal.
13. Install traffic warning devices as needed in accordance with local standards.
14. Contractor shall obtain all permits necessary for demolition from City, County, State or Federal Agencies as required.
15. Demolish existing buildings and clear from site. (Including removal of all footings and foundations.)
16. If ASBESTOS is found in existing structures, the Asbestos must be removed in a legal manner by a contractor licensed to handle asbestos materials. (Not a part of contract)
17. If Contractor observes evidence of hazardous materials or contaminated soils he shall immediately contact the project engineer to provide notification and obtain direction before proceeding with disturbance of said materials or contaminated soil.
18. Limits of demolition/disturbed areas shown on the plans may not be an exact depiction. It is the contractor's responsibility to determine the means and methods of how the work will be completed. The contractor shall determine the area of construction impact. The contractor is responsible to restore all impacted areas and all restoration shall be part of the contract bid.
19. Contractor shall shore and protect neighboring properties per OSHA std. during excavation activities when necessary. All excavation shall remain on and within the bounds of the subject property. Unless specifically noted on the plans and approved from the adjoining neighbor has been obtained prior to any excavation beyond the subject property limits.

CAUTION :

The location and/or elevation of existing utilities as shown on these plans is based on records of the various utility companies and, where possible, measurements taken in the field. The information is not to be relied on as being exact or complete.

Know what's below. Call 811 before you dig.
BLUE STAKES OF UTAH
UTAH NOTIFICATION CENTER, INC.
www.bluestakes.org
1-800-662-4111

REV	DATE	DESCRIPTION

Designed by: SY
Drafted by: JJF
Client Name:
EM Commercial, LLC
24-078 DM

ANA
2010 North Redwood Road, Salt Lake City, Utah 84116
(801) 521-8529 - AVAengineering.net

Demolition Plan
The Marketplace at Eagle Mountain Town Center Phase 4
Eagle Mountain Boulevard & Pony Express Parkway
Eagle Mountain, Utah

STATE OF UTAH

26 Jun, 2025

SHEET NO.
CO.1

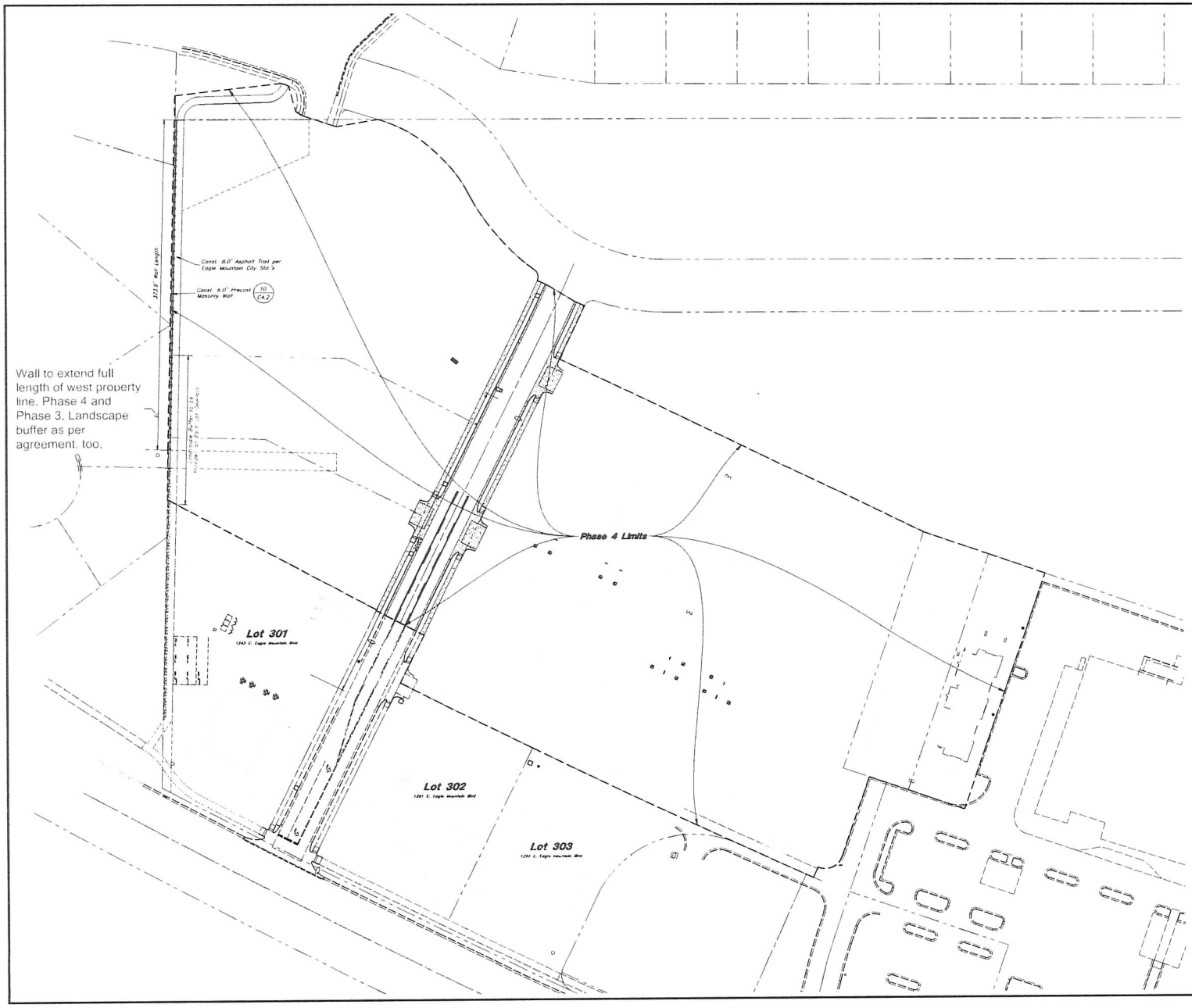

General Site Notes:

1. All dimensions are to back of curb unless otherwise noted
2. Fire lane markings and signs to be installed as directed by the Fire Marshal
3. Aisle markings, directional arrows and stop bars will be painted at each driveway as shown on the plans
4. Const. curb transition at all points where curb abuts sidewalk, see detail
5. Contractor shall place asphalt paving in the direction of vehicle travel where possible
6. Limits of demolition/disturbed areas shown on the plans may not be an exact depiction. It is the contractor's responsibility to determine the means and methods of how the work will be completed. The contractor shall determine the area of construction impact. The contractor is responsible to restore all impacted areas and all restoration shall be part of the contract bid

Construction Survey Note:

The Construction Survey Layout for this project will be provided by Anderson Wahlen & Associates. The Layout Proposal and Professional Services Agreement will be provided to the General Contractor(s) for inclusion in base bids. The Survey Layout proposal has been broken out into Building Costs and Site Costs for use in the Site Work Bid Form

Survey Control Note

The contractor or surveyor shall be responsible for following the National Society of Professional Surveyors (NSPS) model standards for any surveying or construction layout to be completed using Anderson Wahlen and Associates ALTA Surveys or Anderson Wahlen and Associates construction improvement plans. Prior to proceeding with construction staking, the surveyor shall be responsible for verifying horizontal control from the survey monuments and for verifying any additional control points shown on an ALTA survey, improvement plan, or an electronic data provided by Anderson Wahlen and Associates. The surveyor shall also use the benchmarks as shown on the plan, and verify them against no less than three existing hard improvement elevations included on these plans or an electronic data provided by Anderson Wahlen and Associates. If any discrepancies are encountered, the surveyor shall immediately notify the engineer and resolve the discrepancies before proceeding with any construction staking.

PRIVATE ENGINEER'S NOTICE TO CONTRACTORS

The Contractor agrees that he shall assume sole and complete responsibility for job site conditions during the course of construction of this project, including safety of all persons and property that this requirement shall apply continuously and not be limited to normal working hours, and that the contractor shall defend, indemnify, and hold the owner and the engineer harmless from any and all liability, real or alleged, in connection with the performance of work on this project, excepting for liability arising from the sole negligence of the owner or the engineer.

REV	DATE	DESCRIPTION

Designed by: SY
Drafted By: JW
Client Name:
EM Commercial, LLC
24-078 PP

2010 North Redwood Road, Salt Lake City, Utah 84116
(801) 521-8529 AWAengineering.net

Overall Site Plan

The Marketplace at Eagle Mountain Town Center Phase 4

Eagle Mountain Boulevard & Pony Express Parkway
Eagle Mountain, Utah

STATE OF UTAH

26 Jun, 2025

SHEET NO.
C1.1

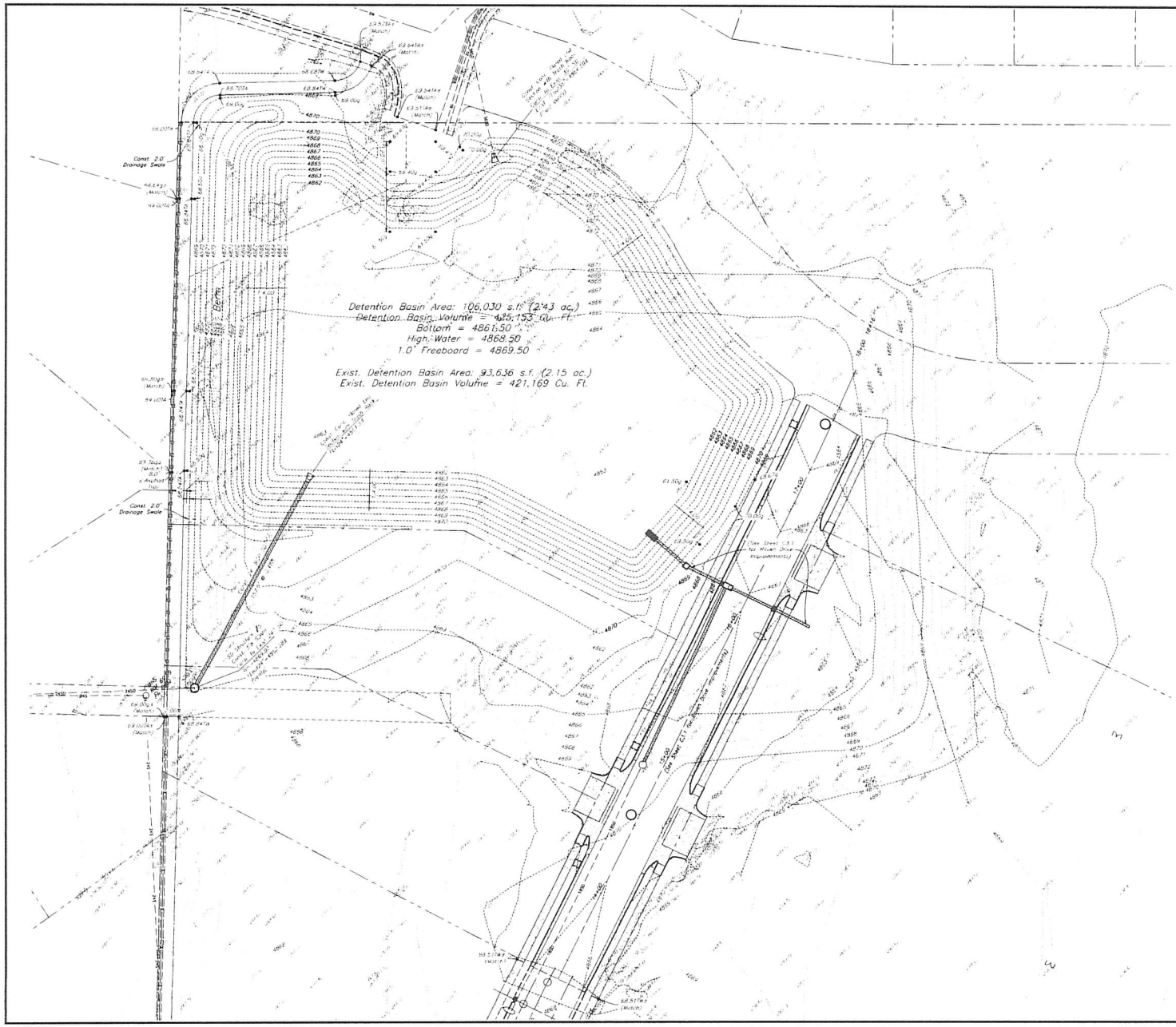

Scale: 1" = 40'

40' 0 40' 80'

General Grading Notes:

1. All grading shall be in accordance with the project geotechnical study.
2. Cut slopes shall be no steeper than 3 horizontal to 1 vertical.
3. Fill slopes shall be no steeper than 3 horizontal to 1 vertical.
4. Fills shall be compacted per the recommendations of the geotechnical report prepared for the project and shall be certified by a Geotechnical Engineer.
5. Areas to receive fill shall be properly prepared and approved by a Geotechnical Engineer prior to placing fill.
6. Fills shall be benched into competent material as per specifications and geotechnical report.
7. All trench backfill shall be tested and certified by a Geotechnical Engineer.
8. A geotechnical engineer shall perform periodic inspections and submit a complete report and map upon completion of the rough grading.
9. The final compaction report and certification from a Geotechnical Engineer shall contain the type of field testing performed. Each test shall be identified with the method of obtaining the in-place density, whether sand cone or drive ring and shall be so listed for each test. Sufficient maximum density determinations shall be performed to verify the accuracy of the maximum density curves used by the field technician.
10. Dust shall be controlled by watering.
11. The location and protection of all utilities is the responsibility of the permitee.
12. Approved protective measures and temporary drainage provisions must be used to protect adjoining properties during the grading process.
13. All public roadways must be cleared daily of all dirt, mud and debris deposited on them as a result of the grading operation. Cleaning is to be done to the satisfaction of the City Engineer.
14. The site shall be cleared and grubbed of all vegetation and deleterious matter prior to grading.
15. The contractor shall provide shoring in accordance with USHA requirements for trench walls.
16. Aggregate base shall be compacted per the geotechnical report prepared for the project.
17. The recommendations in the following Geotechnical Engineering Report by GSH are included in the requirements of grading and site Preparation. The Report is titled "Eagle Mountain Shopping Center, NWC of Eagle Mountain Blvd and Pony Express Parkway."

    Project No.: 0259-014-20
    Dated: January 5, 2021
18. As part of the construction documents, owner has provided contractor with a topographic survey performed by manual or aerial means. Such survey was prepared for project design purposes and is provided to the contractor as a courtesy. It is expressly understood that such survey may not accurately reflect existing topographic conditions.
19. If Contractor observes evidence of hazardous materials or contaminated soils he shall immediately contact the project engineer to provide notification and obtain direction before proceeding with disturbance of said materials or contaminated soil.

REV	DATE	DESCRIPTION

Designed by: SY
Drafted by: JW
Client Name:
EM Commercial, LLC
24-078 PP

ANA
2010 North Redwood Road, Salt Lake City, Utah 84116
(801) 521-8529 - AVAengineering.net

Drainage Plan
The Marketplace at Eagle Mountain Town Center Phase 4
Eagle Mountain Boulevard & Pony Express Parkway
Eagle Mountain, Utah

STATE OF UTAH

26 Jun, 2025

SHEET NO.
C2.1

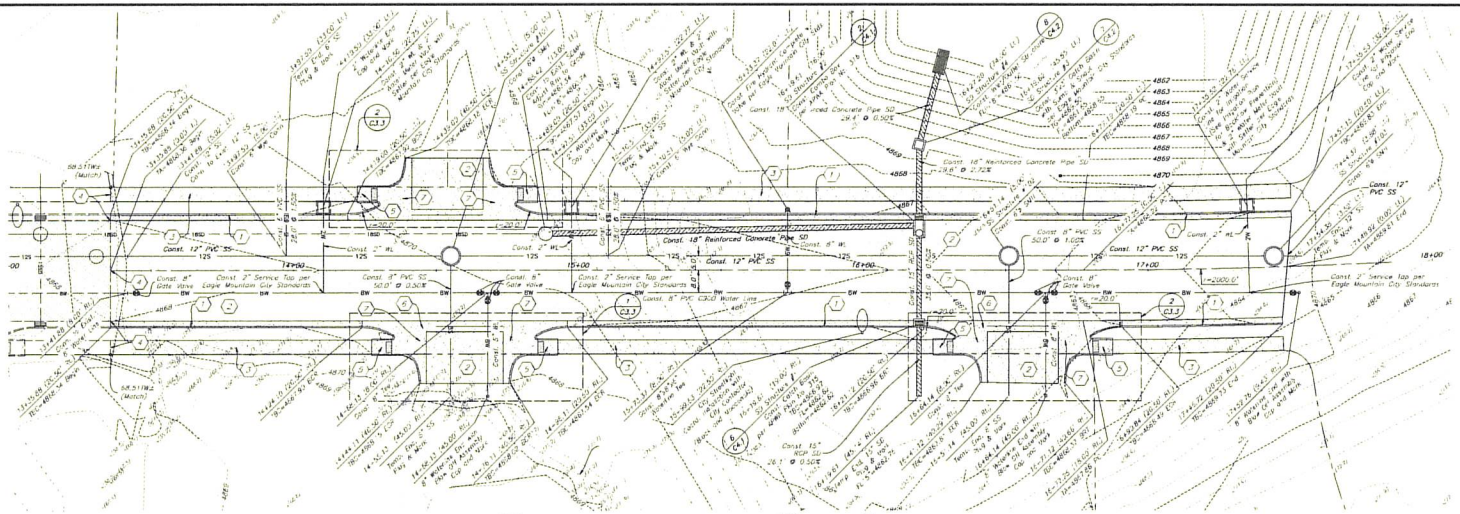

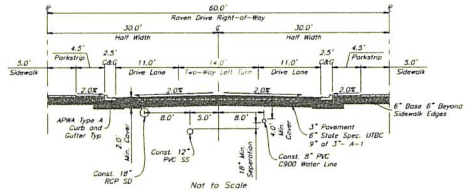

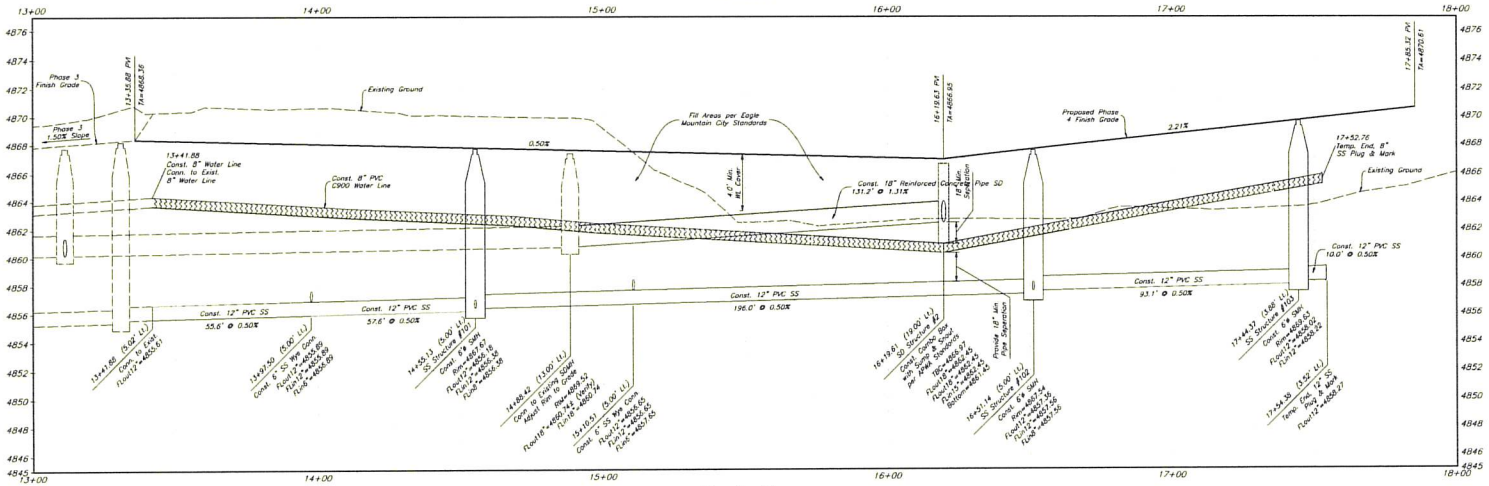

Profile View

Horizontal Scale: 1" = 20'
Vertical Scale: 1" = 4'

20' 0 20' 40'

Hatch Legend

- Asphalt Paving
- Existing Asphalt Paving
- Concrete Paving
- Existing Concrete Paving
- Heavy Duty Asphalt Paving

Roadway Construction Notes

1. Const. Type A 30" Curb & Gutter per APWA Plan No. 205.1 (1/C4.1)
2. Const. Asphalt Paving per Raven Drive ROW Cross Section on this Sheet
3. Const. Concrete Sidewalk per APWA Plan No. 231 (5/C4.1)
4. Connect to Existing Phase 3 Improvements and Match Grade Elevation
5. Const. Accessible Ramp with Detectable Warning Surface per Eagle Mountain City Std.
6. Const. 4.0' Concrete Waterway per APWA Plan No. 211 (3/C4.1)
7. Const. Waterway Transition Structure per APWA Plan No. 211 (4/C4.1)

Storm Drain & Sanitary Sewer Note:

All Storm Drainage & Sanitary Sewer Pipe Lengths and Slopes are from Center of Structure to Center of Structure

Know what's below. Call 811 before you dig.
BLUE STAKES OF UTAH
(UNITY NOTIFICATION CENTER, INC.)
www.bluestakes.org
1-800-662-4111

REV	DATE	DESCRIPTION

Designed by: SY
Drafted by: JJF
Client Name:
EM Commercial, LLC
24-078 PP

2010 North Redwood Road, Salt Lake City, Utah 84116
(801) 521-8529 - AWengineering.net

Plan & Profile

The Marketplace at Eagle Mountain Town Center Phase 4

Eagle Mountain Boulevard & Pony Express Parkway
Eagle Mountain, Utah

STATE OF UTAH

26 Jun, 2025

SHEET NO.
C3.1

Scale: 1" = 20'

20' 0 20' 40'

Striping and Signage Notes

1. Const. 8" White Stripe
2. Const. 4" Double Yellow Stripe
3. Const. Double 4" Solid & Broken Yellow Stripe
4. Const. Directional Arrows per MUTCD

Hatch Legend

- Asphalt Paving
- Existing Asphalt Paving
- Concrete Paving
- Heavy Duty Asphalt Paving

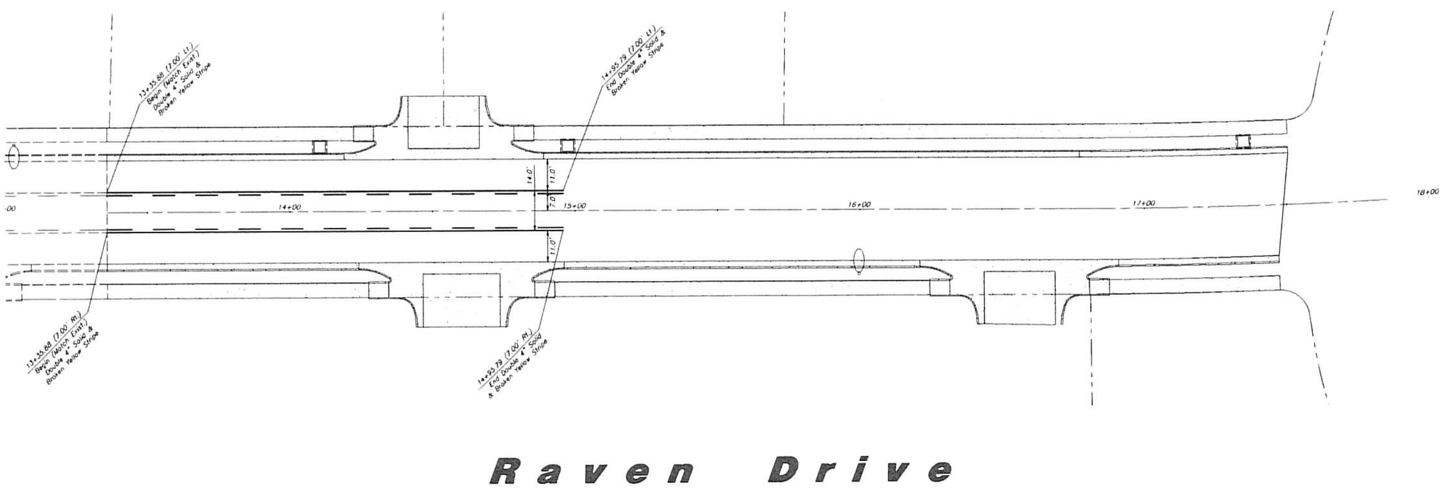

REV	DATE	DESCRIPTION

Designed by: ST
Drafted by: JW
Client Name:
EM Commercial, LLC
24-078 PP

2010 North Redwood Road, Salt Lake City, Utah 84116
(801) 521-8529 · AWAengineering.net

Raven Drive Striping Plan

The Marketplace at Eagle Mountain Town Center Phase 4

Eagle Mountain Boulevard & Pony Express Parkway
Eagle Mountain, Utah

STATE OF UTAH

26 Jun, 2025

SHEET NO.
C3.2

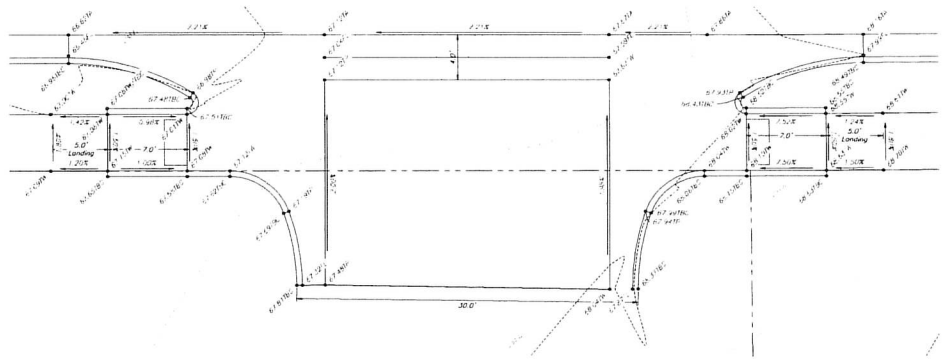

3 **Public Curb Ramp Detail**
Scale: 1" = 5'

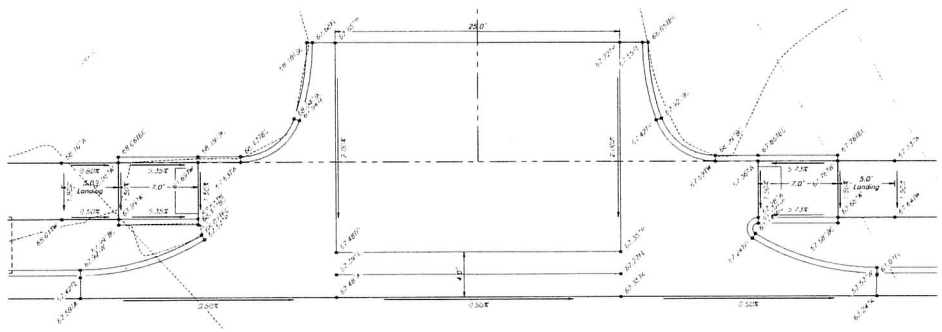

2 **Public Curb Ramp Detail**
Scale: 1" = 5'

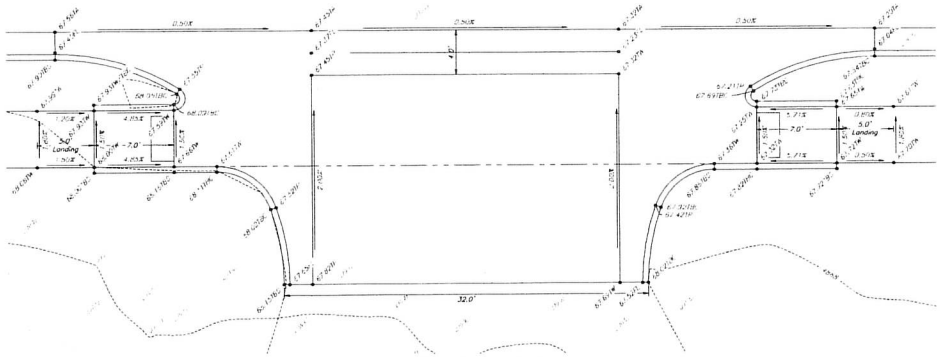

1 **Public Curb Ramp Detail**
Scale: 1" = 5'

Prior to any construction of any Accessible improvements, a Pre-Construction meeting shall be held between Contractor and Engineer. Contractor is Responsible to contact Engineer and Schedule Pre-Construction Meeting

Public Curb Ramp Construction Notes

1. All public curb ramps shall be constructed in accordance with governing municipalities standards and specifications.
2. It is the contractors responsibility to obtain governing municipalities standards and specifications.
3. The Client, Contractor and Subcontractor should immediately notify the Consultant of any conditions of the project that they believe do not comply with the current state of Accessible and Usable Buildings and Facilities (ICC/ANSI A117.1-Latest Edition) and/or FHAA

REV.	DATE	DESCRIPTION

Designed by: SY
Drafted by: JW
Client Name:
EM Commercial, LLC
24-078 PP

2010 North Redwood Road, Salt Lake City, Utah 84116
(801) 521-8529 - AVAengineering.net

Grading Details

The Marketplace at Eagle Mountain Town Center Phase 4
Eagle Mountain Boulevard & Pony Express Parkway
Eagle Mountain, Utah

STATE OF UTAH

26 Jun, 2025

SHEET NO.
C3.3

Scale: 1" = 20'

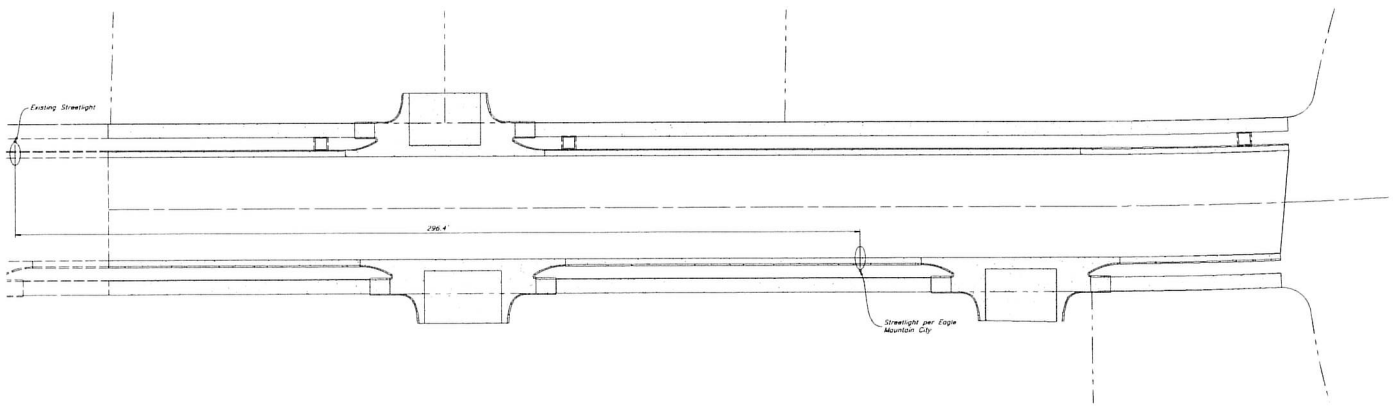

Raven Drive

REV.	DATE	DESCRIPTION

Designed by: ST
Drafted by: JR
Client Name:
EM Commercial, LLC
24-078 PP

2010 North Redwood Road Salt Lake City, Utah 84116
(801) 521-8529 AVAengineering.net

Streetlight Plan Plan

The Marketplace at
Eagle Mountain Town Center Phase 4
Eagle Mountain Boulevard & Pony Express Parkway
Eagle Mountain, Utah

STATE OF UTAH

26 Jun, 2025

SHEET NO.
C3.4

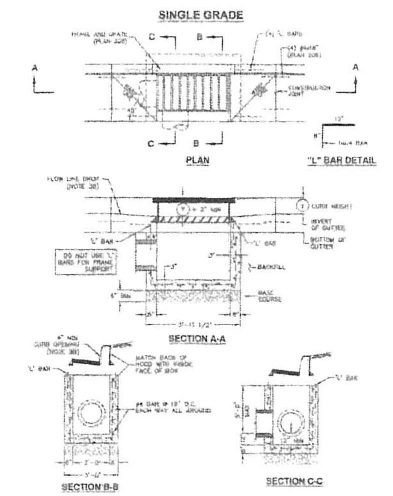

APWA Utah Chapter — Catch basin — Plan 315.1

APWA Plan No. 315
Catch Basin
Not to Scale
(6)

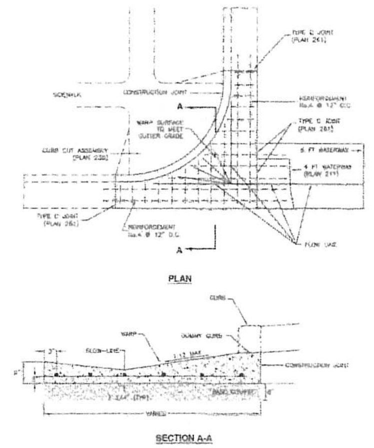

APWA Utah Chapter — Waterway transition structure — Plan 213

APWA Plan No. 213
Waterway Transition Structure
Not to Scale
(4)

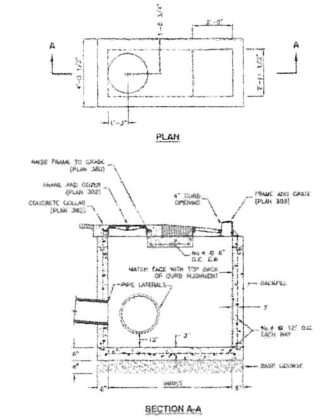

APWA Utah Chapter — Combination catch basin and cleanout box — Plan 316

APWA Plan No. 316
Combo Box
Not to Scale
(2)

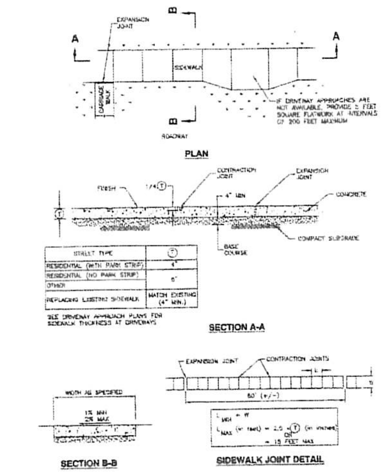

APWA Utah Chapter — Sidewalk — Plan 231

APWA Plan No. 231
Sidewalk
Not to Scale
(5)

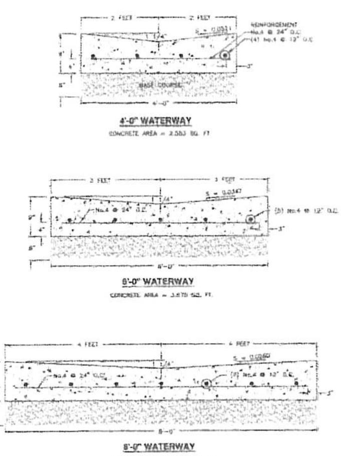

APWA Utah Chapter — Waterway — Plan 211

APWA Plan No. 211
Waterway
Not to Scale
(3)

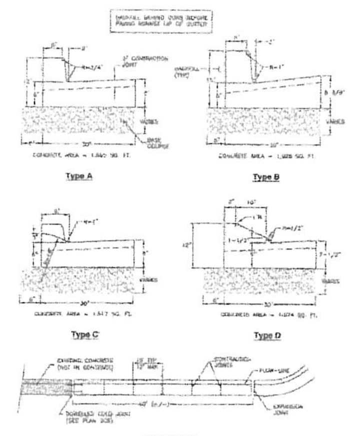

APWA Utah Chapter — Curb and gutter — Plan 205.1

APWA Plan No. 205.1
Curb & Gutter
Not to Scale
(1)

REV	DATE	DESCRIPTION

Designed by: ST
Drafted by: JM
Client Name
EM Commercial, LLC
24-078 DT

2010 North Redwood Road, Salt Lake City, Utah 84116
(801) 521-8529 · AWAengineering.net

Details

The Marketplace at
Eagle Mountain Town Center Phase 4
Eagle Mountain Boulevard & Pony Express Parkway
Eagle Mountain, Utah

26 Jun, 2025

SHEET NO.
C4.1

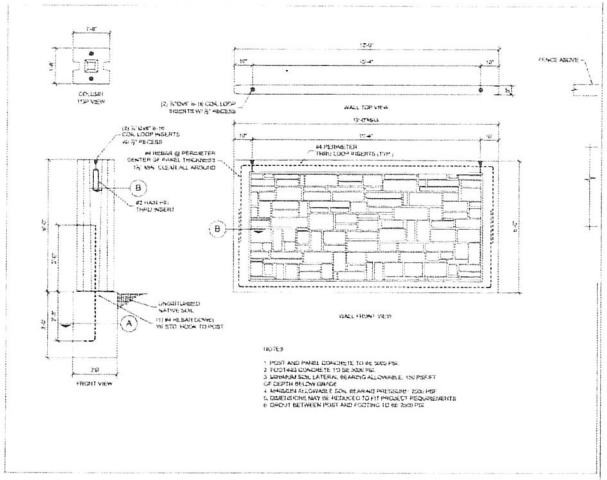

10 **Precast Masonry Wall Detail**

Not to Scale

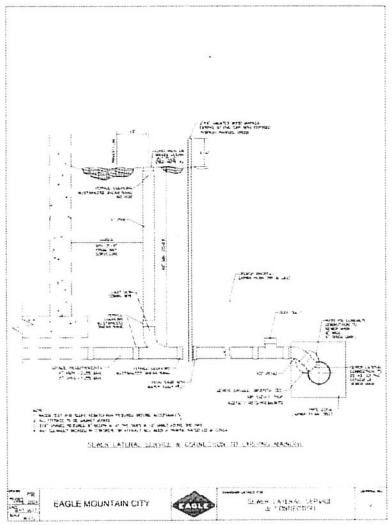

9 **Eagle Mountain City Sewer Lateral Service & Connection**

Not to Scale

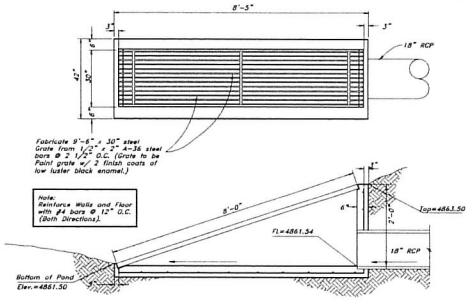

8 **Inlet / Outlet Structure**

Not to Scale

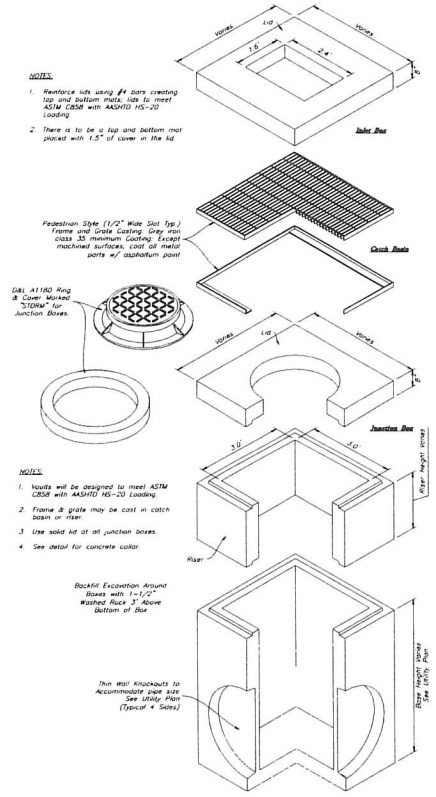

7 **Precast 3' x 3' Catch Basin Junction Box/Inlet**

Not to Scale

REV.	DATE	DESCRIPTION

Designed by: SY
Drafted by: JW
Client Name: EM Commercial, LLC
24-078 DT

ANA
2010 North Redwood Road, Salt Lake City, Utah 84116
(801) 521-3526 · ANAengineering.net

Details

The Marketplace at Eagle Mountain Town Center Phase 4

Eagle Mountain Boulevard & Pony Express Parkway
Eagle Mountain, Utah

STATE OF UTAH

26 Jun, 2025

SHEET NO.
C4.2

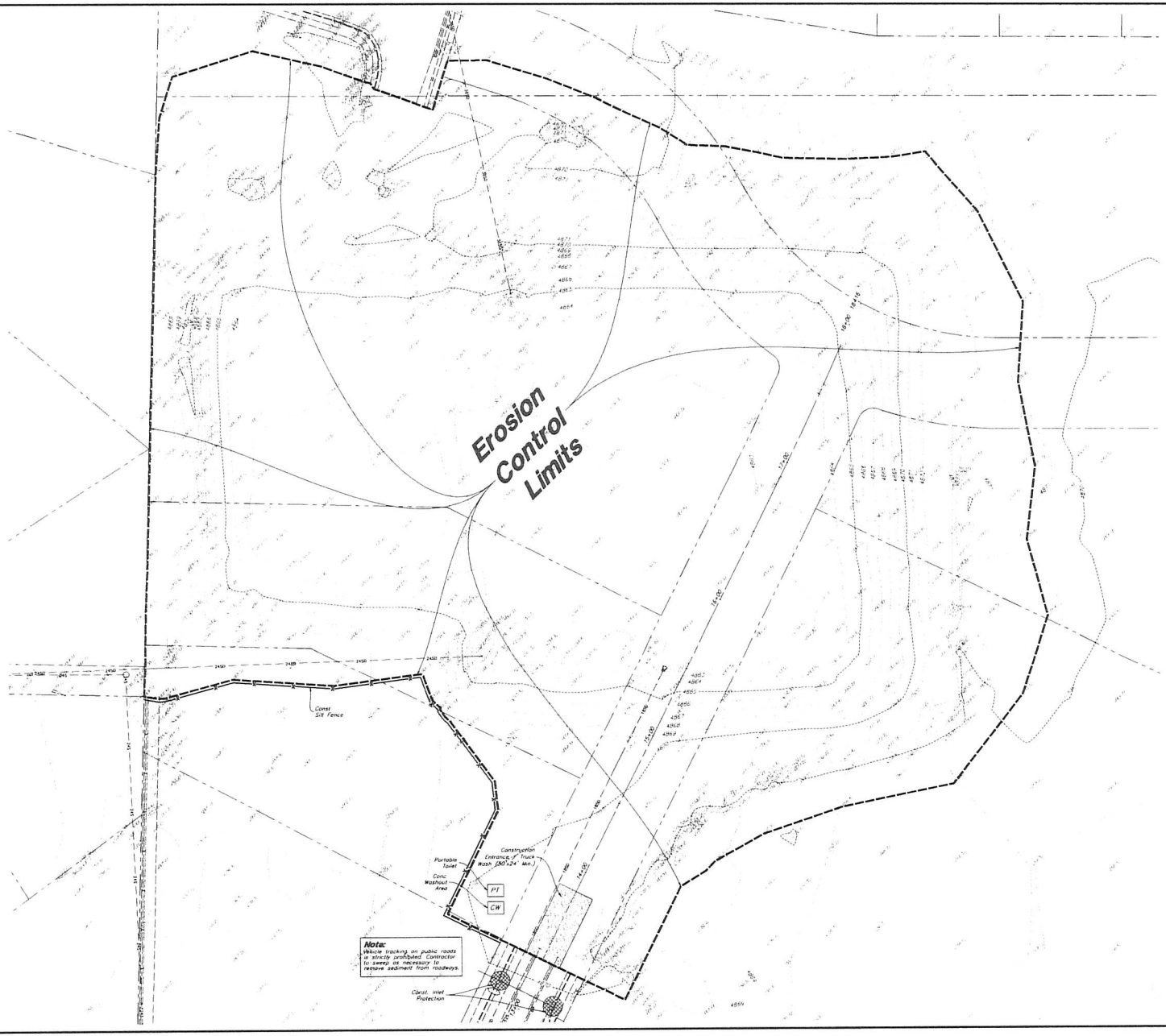

Scale: 1" = 20'

20' 0 20' 40'

Legend

Place Inlet Protection at all Inlet Locations to prevent boxes from silting.	2 C5.3
Silt Fence	3 C5.3
Limit of Disturbance	
Construction Entrance / Truck Wash (50'x24' Min.)	1 C5.3
Concrete Washout Area	CW 4 C5.3
Portable Toilet	PT
Gravel Sock	5 C5.3
Existing Contour	
Existing Spot	
Proposed Contour	78

Erosion Control Notes

1. Storm water will be discharged into an existing drainage system. Existing Lines shall be inspected prior to Certificate of Occupancy and cleaned if necessary.
2. The Storm Water Prevention Plan shall conform to all State Division of Environmental Protection Regulations.
3. All Construction equipment will enter thru Designated Construction Entrances.
4. Coordinate Entrance locations with the local jurisdiction.
5. Inlet Protection Devices and Barriers shall be Repaired or Replaced if they Show Signs of Undermining or Deterioration.
6. Silt Fences shall be Repaired to their Original Conditions if Damaged. Sediment shall be Removed from Silt Fences when it Reaches one-half the Height of the Silt Fence.
7. The Construction Entrances shall be Maintained in a Condition which will Prevent Tracking or Flow of Mud onto Public Right-of-Way. This may Require Periodic Top Dressing of the Construction Entrances as Conditions Demand.
8. All Materials Spilled, Dropped, Washed or Tracked from Vehicles onto Roadways or into Storm Drains must be Removed Immediately.
9. Due to the Grade Changes During the Development of the Project, the Contractor shall be Responsible for Adjusting the Erosion Control Measures (Silt Fences, Inlet Protection, Etc...) to Prevent Erosion.
10. Contractor shall use Vehicle Tracking Control at all Locations where Vehicles will Enter or Exit the Site. Control Facilities will be Maintained while Construction is in Progress, Moved when Necessary and Removed when the Site is Paved.
11. Inlet Protection Devices shall be installed immediately upon individual inlets becoming Functional.
12. This Document is Fluid Allowing for Changes, Modifications, Updates and Alternatives. It is the Responsibility of the Contractor to Keep Record of all Alterations made to the Erosion Control Measures implemented for the Project on this Plan and in the Storm Water Pollution Prevention Plan.
13. Cover Exposed stockpiles of soils, construction and landscaping materials with heavy plastic sheeting.
14. Re-vegetate areas where landscaping has died or not taken hold.
15. Divert storm water runoff around disturbed soils with berms or dirt swales.
16. Contractor to provide permanent stabilization to any areas disturbed by construction by hydroseeding native vegetation (if not otherwise stabilized).
17. Contractor is responsible for obtaining a fugitive dust control permit through the Division of Air Quality. All responsibilities relating to the production of the dust control plan shall be the responsibility of the Contractor.

REV	DATE	DESCRIPTION

Designed by: SY
Drafted by: JW
Client Name:
EM Commercial, LLC
24-078 EC - Phase 1

2010 North Redwood Road, Salt Lake City, Utah 84116
(801) 521-8529 - AVAengineering.net

Erosion Control Plan - Phase 1

The Marketplace at Eagle Mountain Town Center Phase 4

Eagle Mountain Boulevard & Pony Express Parkway
Eagle Mountain, Utah

STATE OF UTAH

26 Jun, 2025

SHEET NO.
C5.1

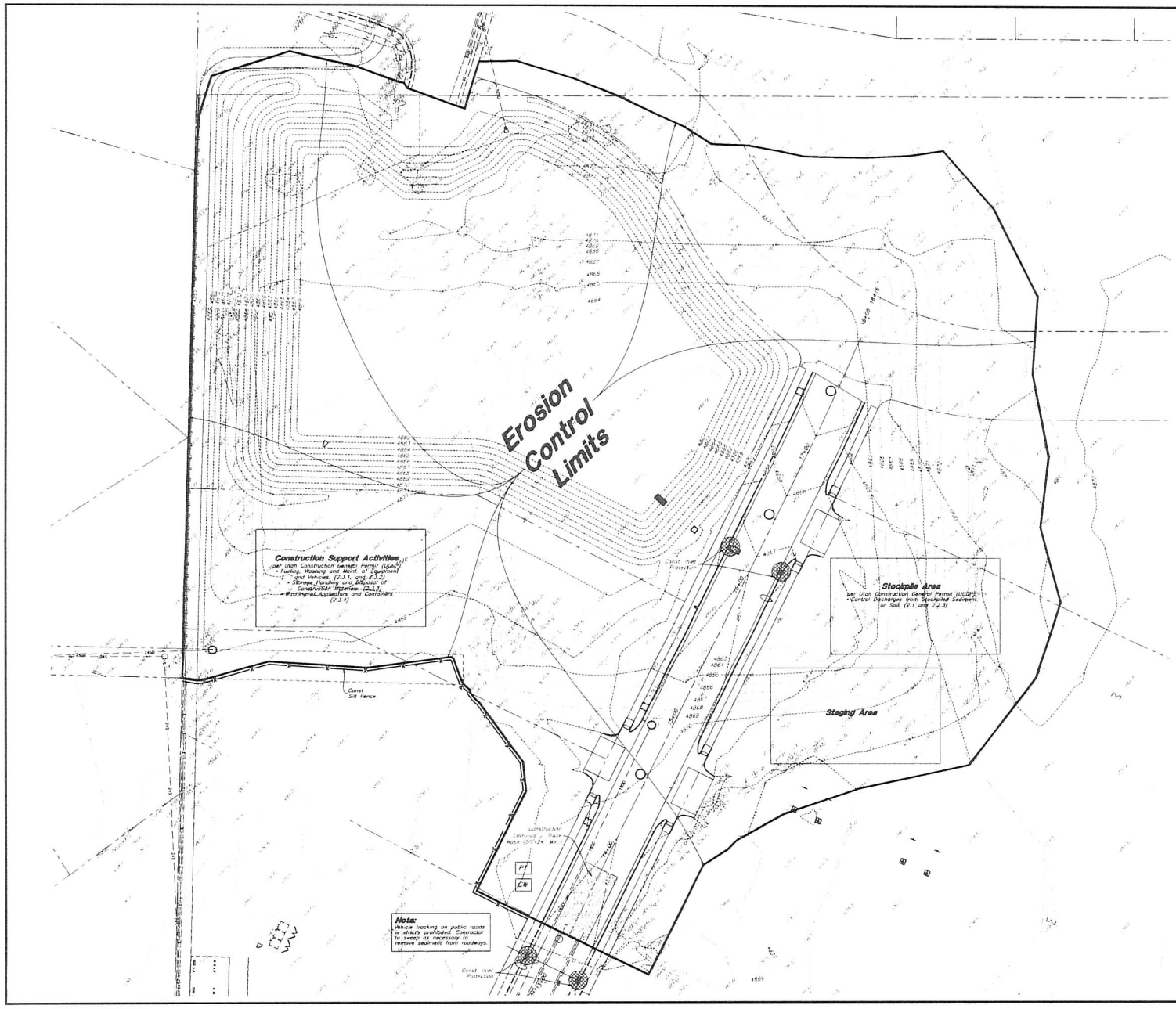

Scale: 1" = 20'

20' 0 20' 40'

Legend

Place inlet Protection at all Inlet Locations to prevent boxes from silting	2 / C5.3
Silt Fence	3 / C5.3
Limit of Disturbance	
Construction Entrance / Truck Wash (50'x24' Min.)	1 / C5.3
Concrete Washout Area	CW 4 / C5.3
Portable Toilet	PT
Gravel Sack	5 / C5.3
Existing Contour	
Existing Spot	
Proposed Contour	78

Erosion Control Notes

1. Storm water will be discharged into an existing drainage system. Existing Lines shall be inspected prior to Certificate of Occupancy and cleaned if necessary.
2. The Storm Water Prevention Plan shall conform to all State Division of Environmental Protection Regulations.
3. All Construction equipment will enter thru Designated Construction Entrances.
4. Coordinate Entrance locations with the local jurisdiction.
5. Inlet Protection Devices and Barriers shall be Repaired or Replaced if they Show Signs of Undermining or Deterioration.
6. Silt Fences shall be Repaired to their Original Conditions if Damaged. Sediment shall be Removed from Silt Fences when it Reaches one-half the height of the Silt Fence.
7. The Construction Entrances shall be Maintained in a Condition which will Prevent Tracking or Flow of Mud onto Public Right-of-Way. This may Require Periodic Top Dressing of the Construction Entrances as Conditions Demand.
8. All Materials Spilled, Dropped, Washed or Tracked from Vehicles onto Roadways or into Storm Drains must be Removed Immediately.
9. Due to the Grade Changes During the Development of the Project, the Contractor shall be Responsible for Adjusting the Erosion Control Measures (Silt Fences, Inlet Protection, Etc...) to Prevent Erosion.
10. Contractor shall use Vehicle Tracking Control at all Locations where Vehicles will Enter or Exit the Site. Control Facilities will be Maintained while Construction is in Progress, Moved when Necessary and Removed when the Site is Paved.
11. Inlet Protection Devices shall be installed immediately upon individual inlets becoming Functional.
12. This Document is Fluid Allowing for Changes, Modifications, Updates and Alternatives. It is the Responsibility of the Contractor to Keep Record of all Alterations made to the Erosion Control Measures implemented for the Project on this Plan and in the Storm Water Pollution Prevention Plan.
13. Cover Exposed stockpiles of soils, construction and landscaping materials with heavy plastic sheeting.
14. Re-vegetate areas where landscaping has died or not taken hold.
15. Divert storm water runoff around disturbed soils with berms or dirt swales.
16. Contractor to provide permanent stabilization to any areas disturbed by construction by hydroseeding native vegetation (if not otherwise stabilized).
17. Contractor is responsible for obtaining a fugitive dust control permit through the Division of Air Quality. All responsibilities relating to the production of the dust control plan shall be the responsibility of the Contractor.

REV	DATE	DESCRIPTION

Designed by: SY
Drafted by: JW
Client Name:
EM Commercial, LLC
24-078 EC - Phase 2

3010 North Redwood Road, Salt Lake City, Utah 84116
(801) 521-8529 - AVAengineering.net

Erosion Control Plan - Phase 2

The Marketplace at Eagle Mountain Town Center Phase 4

Eagle Mountain Blvd and Pony Express Parkway
Eagle Mountain, Utah

STATE OF UTAH

26 Jun, 2025

SHEET NO.
C5.2

BMP 1- Portable Toilet on Pervious Surface

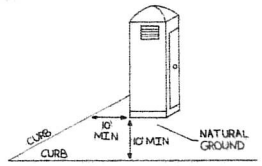

APPLICATION

- Provide temporary sanitary facilities when permanent facilities are too far from activities or are unavailable.

INSTALLATION/USE PROCEDURE

- Locate portable toilets away from waters of the state, and at least 10 feet from any storm water conveyance, inlet, curb and gutter, or conduit to a waterway.
- Whenever possible, locate portable toilet upon natural ground and not on impervious surfaces such as asphalt, concrete, or similar.
- Prepare a level surface and provide clear access to the toilet(s) for servicing and for on-site personnel.
- Wherever possible, locate a portable toilet next to track out pad or provide gravel access pad for maintenance pick up to reduce occurrence of mud track out by service provider.
- Secure portable toilets to prevent tipping e.g. stakes, tie downs, etc.

OPERATOR BMP MODIFICATION OR REPLACEMENT

- The operator is invited to propose an alternative BMP or modify this preferred BMP. The proposed BMP must match or exceed performance requirements as this preferred BMP. Any deviations from this preferred BMP must be reviewed and accepted by the oversight authority.
- Submit BMP modifications or replacements to the oversight authority for review, including but not limited to: Proprietary system literature, modified illustrations, any operation procedures and maintenance adjustments, etc.
- Also see BMP 2- Portable Toilet on Pavement.

MAINTENANCE/MANAGEMENT

- Portable toilets should be maintained in good working order by licensed service.
- Portable toilets should be inspected daily to detect any leaks.
- Damaged toilets must be repaired/replaced immediately.
- All waste must be deposited in the sanitary sewer system for treatment with appropriate agency approval.
- Implement spill BMP immediately upon spill incident.
- If track out from the service provider occurs, debris must be removed as soon as practicable.

PERFORMANCE

- A portable toilet is expected to contain human waste with zero exposure to storm water.
- A successful portable toilet is clean, effective, and is processed by the appropriate licensed facility.

REFERENCE

- Construction General Storm Water Permit (CGP) 2.3.3(f)
- Criminal: PUI Permit (CPP) 2.4.4

7 **Eagle Mountain City BPM 1 - Portable Toilet on Pervious Surface**
Not to Scale

6 **Not Used**
Not to Scale

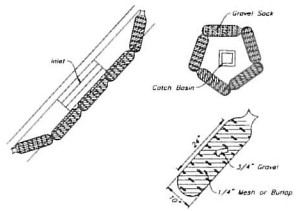

5 **Gravel Sock Sediment Barrier**
Not to Scale

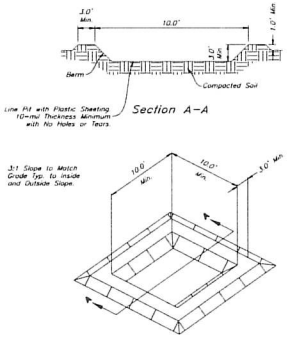

4 **Concrete Washout**
Not to Scale

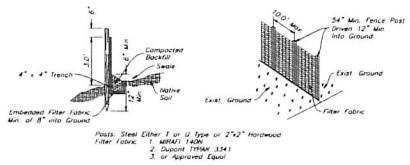

Notes:

1. Filter cloth to be fastened securely to fence posts with wire ties or staples.
2. When two sections of filter cloth adjoin each other they shall be overlapped by six inches and folded.
3. Collected material shall be removed when "bulges" develop in the silt fence.

3 **Silt Fence Section**
Not to Scale

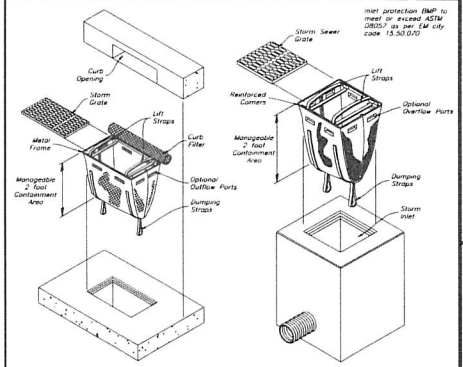

2 **Dandy Sack Inlet Protection**
Not to Scale

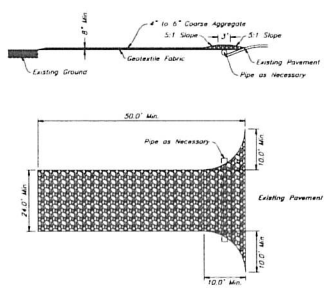

1 **Stabilized Construction Entrance**
Not to Scale

REV	DATE	DESCRIPTION

Designed by: SY
Drafted by: JW
Client Name
EM Commercial, LLC
24-078 EC - Phase 2

2010 North Redwood Road, Salt Lake City, Utah 84116
(801) 521-8529 AVAengineering.net

Erosion Control Details
The Marketplace at Eagle Mountain Town Center Phase 4
(Eagle Mountain Boulevard & Pony Express Parkway)
(Eagle Mountain, Utah)

26 Jun, 2025

SHEET NO.
C5.3

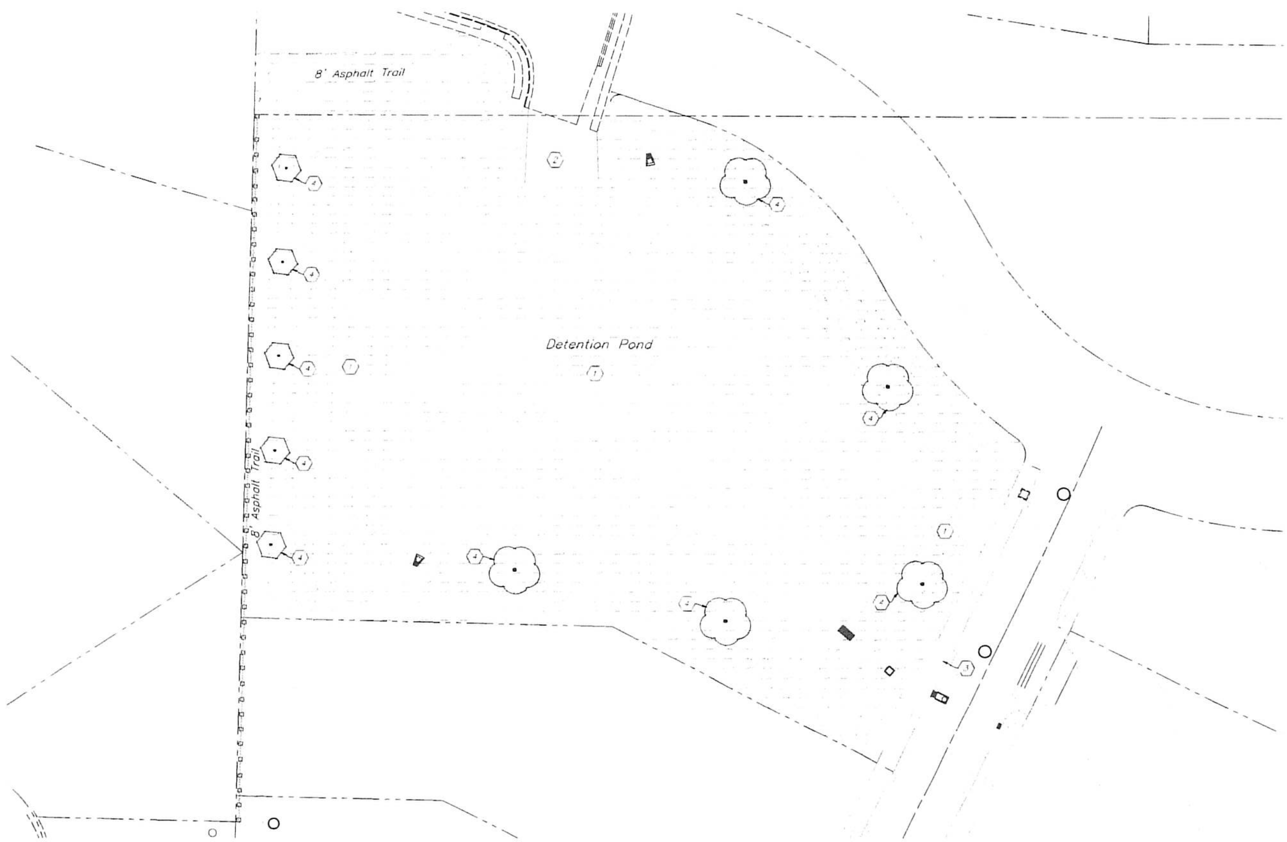

Parkstrip Landscaping (Public Improvement) Shall be Installed or Assurance Posted Prior to Plat Recordation as Per State Code.

Scale: 1" = 30'

30' 0 30' 60'

Landscape Data

Seeded Area = 99,916 s.f.

Decorative Stone Area = 800 s.f.

Landscape Notes:

1. All Seeded Area and Trees Shall Receive Irrigation. See Sheet L2.1 for Layout and Sheet L2.2 for Details.
2. All Areas Disturbed by Construction Shall be Landscaped and Not Left Undone.

Landscape Installation Keynotes

(1) Install Seed Mix in Detention Pond and Areas Disturbed by Grading - See Material Sch. and Detail for More Info.

(2) Maintenance Road - Area Shall not Receive Seed

(3) Install Decorative Stone in Parkstrip Over Dewitt Pro5 Weed Barrier - See Material Sch. for More Detail

(4) Install Tree in Seeded Area with a 3' Diameter Tree Ring with Wood Mulch to Keep Base of Tree Moist

PLANT SCHEDULE

SYMBOL	QTY	BOTANICAL / COMMON NAME	SIZE	MATURE SIZE	WATER REQUIREMENT
TREES					
(hexagon)	5	Acer glabrum / Rocky Mountain Maple *	2" Caliper	15' (H) x 15' (W)	Low
(round)	5	Celtis reticulata / Netleaf Hackberry *	2" Caliper	25' (H) x 20' (W)	Low

* Tree has been Selected From the Eagle Mountain Tree List

MATERIAL SCHEDULE

(stippled box)	Rangeland Seed Mix - Seed Mix Shall be Installed in Detention Pond and Surrounding Areas Disturbed by Grading Activity; Seed Mix Shall be Installed by the Hydroseeding Method; See Detail for Seeded Area Preparation, Seed Mix and Slurry Mix Composition, and Application Rate	Detail: 1/L1.1
(box)	Decorative Stone - Install Stone over Dewitt Pro5 Weed Barrier at a Four (4) Inch Depth to Cover Weed Barrier; Stone Shall be Used in Parkstrip Along Detention Pond Road Frontage; Stone Shall be Washed Prior to Installation; Stone Shall be 1 1/2" in Diameter, Angular, and Have Earth Tone/Tan Colors From Utah Landscaping Rock (South Towne); Provide a Sample for Approval	Detail: 2/L1.1
None	Decorative Shredded Bark Mulch - Install a Tree Ring Around the Base of Trees in Seeded Area and Extend to Tree Drip Line (3' Diameter); Mulch Shall be Brown in Color, Decorative, and 1-1 1/2 Inch in Diameter From a Local Source; Install at a Four (4) Inch Depth	None

General Landscape Notes:

1. Prior to construction, the contractor shall be responsible for locating all underground utilities and shall avoid damage to all utilities during the course of the work. It shall be the responsibility of the contractor to protect all utility lines during the construction period, and repair any and all damage to utilities, structures, site appurtenances, etc which occurs as a result of the landscape construction.
2. The landscape contractor shall examine the site conditions under which the work is to be performed and notify the general contractor in writing of unsatisfactory conditions. Do not proceed until conditions have been corrected.
3. The contractor shall provide all materials, labor and equipment required for the proper completion of all landscape work as specified and shown on the drawings.
4. Contractor shall call Blue Stake before excavation for plant material.
5. See civil drawings for all hardscape, grading, and drainage information.
6. Contractor safety and cleanup must meet OSHA standards at all times. All contractors must have adequate liability, personnel injury and property damage insurance. Clean-up must be performed daily, and all hardscape areas must be washed free of dirt and mud on final cleanup. Construction must occur in a timely manner.
7. The contractor shall install all landscape material per plan, notes and details.
8. No grading or soil placement shall be undertaken when soils are wet or frozen.
9. Existing soil shall be used for seeded areas.
10. All specified landscape areas shall receive decorative stone over Dewitt Pro5 weed barrier. Stone shall be evenly spread on a carefully prepared grade free of weeds. The top of stone should be slightly below finish grade and concrete areas. All stone shall be washed prior to installation.
11. All plant material holes shall be dug twice the diameter of the rootball and 6 inches deeper. Excavated material shall be removed from the site and replaced with plant backfill mixture. The top of the root balls, shall be planted flush with the finish grade.
12. Plant backfill mix shall be composed of 3 parts topsoil to 1 part soil pep. Deep water all plant material immediately after planting. Add backfill mixture to depressions as needed.
13. All new plants shall be balled and burlapped or container grown, unless otherwise noted on plant schedule.

Rangeland Seed Mix

Scientific Name	Common Name	Bulk Pounds per Acre
Agropyron fragile	Siberian Wheatgrass	2.00
Agropyron cristatum	Crested Wheatgrass	2.00
Hesperotipa comata	Needle & Tread Grass	0.50
Pseudoroegneria spicata	Bluebunch Wheatgrass	4.00
Triticum aestivum	Sterile Triticale	3.00
Medicago sativa falcata	Falcata Alfalfa	4.00
Medicago sativa	Ladak Alfalfa	4.00
Linum perenne	Blue Flax	3.00
Sanguisorba minor	Burnete Salad	1.00
Achillea millefolium	Western Yarrow	1.00
Helianthus annuus	Annual Sunflower	0.50
Total		25.00

Seeding Notes:

1. Temporary Irrigation Shall be Installed in the Seeded Areas to Assist in the Seeding to be Successful. See Irrigation Plan L2.1 for Layout.
2. Existing Soil Shall be Used in Areas to be Seeded. Construction Debris, Trash, Weeds, and Large Rocks Shall be Removed.
3. Soil Shall be Scarified and Broken up in Preparation for Seeding. Tracking Shall be Used on Hillsides by a Trackhoe Perpendicular to Slopes to Provide a Slight Indentation for Seed to Rest on Hillside.
4. It is Recommended that Seeding Shall be Done in October or November as Weather Permits to Take Advantage of Seasonal Precipitation and Cooler Temperatures. Seeding that Takes Place During the Spring or Summer that Doesn't Take Shall be Reseeded at the Specified Seed Rate.
5. Seed Shall be Installed Using the Hydroseeding Method. in Areas That Are Difficult to Hydroseed, Broadcast Seeding Shall be Used. Broadcast Seeding Areas Shall be Raked in to Provide Good Seed to Soil Contact. See Table on this Plan for Seed Composition and Application Rate. Apply 2,500 lbs./acre of Hydromulch and 100 lbs./acre of Tackifier. Incorporate a Starter Fertilizer in Hydroseed Mix per Recommendations of the Seeding Company.
6. Seed Mix Shall be Obtained from a Local Source. If Some of the Seed Types are not Available, Substitutions May be Provided. The Seed Mix Shall be Composed of a Minimum of 4 Species of Grass Listed in the Seed Mix Table and 5 Species of Forbs, which one has to be Alfalfa falcata.

(1) **DETENTION POND SEED MIX**
NOT TO SCALE

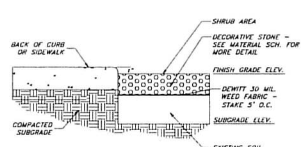

(2) **LANDSCAPE AREA WITH DECORATIVE STONE**
NOT TO SCALE

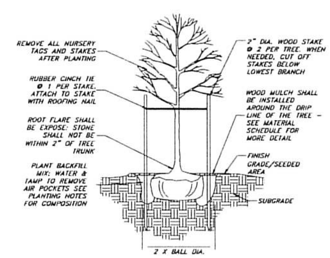

NOTE:
1. TREES IN BALL AND BURLAP SHALL HAVE THE STRINGS, BURLAP, CAGES, AND PLASTIC CUT AND REMOVED FROM THE ROOT BALL.
2. TREE STAKES AND TIES SHALL BE REMOVED AFTER ONE GROWING SEASON. IF TREES ARE NOT ESTABLISHED, LEAVE STAKES AND TIES FOR ANOTHER GROWING SEASON.

(3) **DECIDUOUS TREE PLANTING**
NOT TO SCALE

811 Know what's below. Call before you dig.

REV	DATE	DESCRIPTION

Designed by: SY
Drafted by: JW
Client Name: EM Commercial, LLC
24-078 LS

AWA
2010 North Redwood Road, Salt Lake City, Utah 84116
(801) 521-8529 AWAengineering.net

Landscape Plan

The Marketplace at Eagle Mountain Town Center Phase 4

Eagle Mountain Boulevard & Pony Express Parkway
Eagle Mountain, Utah

State of Utah — Jared R. Marshall — Licensed Landscape Architect — 06/26/2025

26 Jun, 2025

SHEET NO. **L1.1**

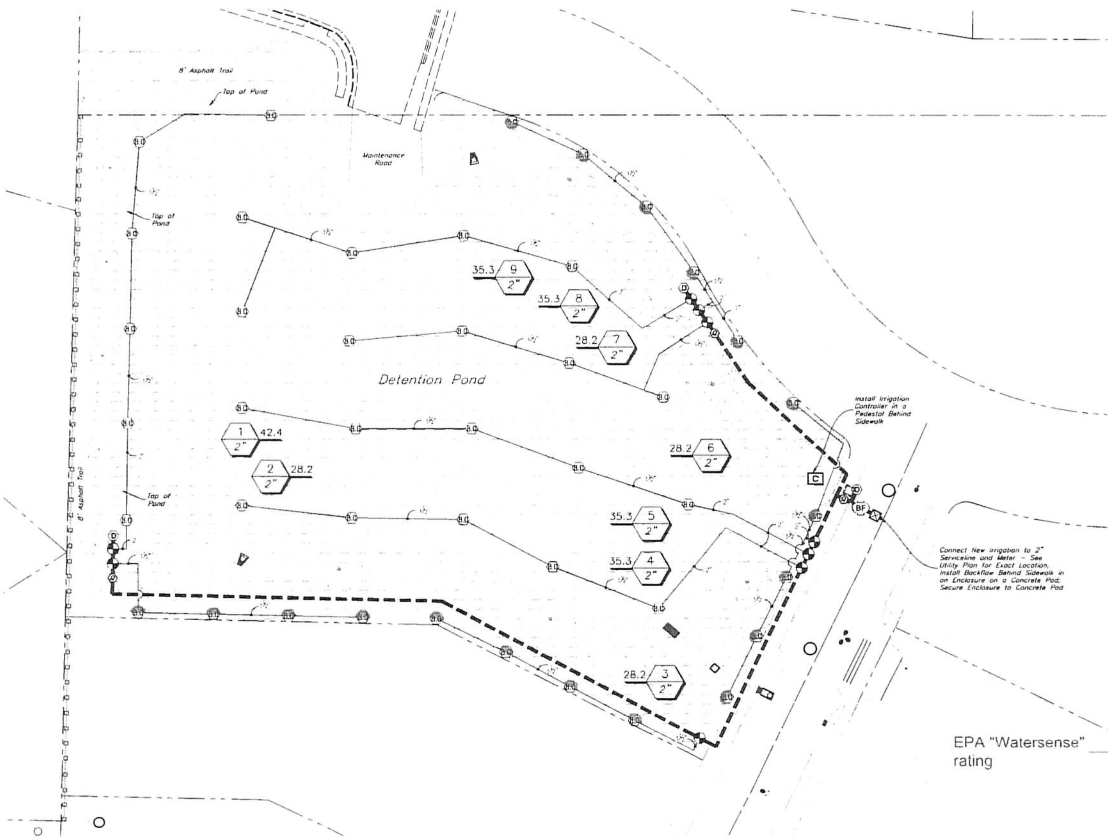

Scale: 1" = 30'

30' 0 30' 60'

Irrigation Notes:

1. See Sheet L1.1 for Layout of Seeding for Detention Pond and Details
2. See Sheet L3.1 for Irrigation Details.
3. The Irrigation System Requires a Minimum of 63 psi to Function. The City Reports a Water Pressure of 80 psi in the Area.

Main Service Line & Other Irrigation Components Are Shown in Paved Or Hardscape Surfaced For Clarity Purposes ONLY! Install All Irrigation Components within Landscaped Areas

Irrigation Schedule

Symbol	Manufacturer/Model #	Description	Notes	Detail
Valves				
(Remote control valve symbol)	Rain Bird 200-PEB	Remote Control Valve	2 Inch Size; Install in Standard Valve Box with 3" Depth of Gravel over Weed Barrier; Install with Water Proof Wire Connectors	2/L3.1
Q	Rain Bird 44RC	Quick Coupler Valve With a Swing Joint Assembly	1 Inch Size; Install in 10" Round Valve Box with 3" Depth of Gravel over Weed Barrier	7/L3.1
D	Matco-Norca 759	Manual Drain Valve	1/2" inch Size; Install at End of Mainline and After Filter in a 10" Round Valve Box with 6" Depth Sump of Gravel Over Weed Barrier	6/L3.1
Rotors				
8.0	Rain Bird 5012-PC	12" Pop-Up Rotor with Adjustable to Full Circle with Rain Curtain Nozzles	Adjust Radius Reduction Screws as Needed to Achieve Appropriate Radii Coverage for Head to Head Coverage; Zones Have Been Laid Out to Provide Matched Precipitation Rate; Full Nozzles and Half Nozzles Shall be on Separate Valves as Shown on Plan for Matched Precipitation Rate	5/L3.1
P.O.C. Components				
☒	Mueller Oriseal Mark II	Stop & Waste Valve	2 Inch Size; Installed in 10" Round Valve Box with 3" Depth Gravel Over Weed Barrier	1/L3.1
BF	Wilkins 375XL Series	Reduce Pressure Backflow Assembly	2 Inch Size; Backflow Preventer Shall be Properly Installed and Tested to Meet all State and Local Health and Safety Laws and Ordinances; Install in GuardShock Enclosure (#GS-2) on Poured Concrete Pad with Frost Guard (FG-2) and 2 Locks (GS-AWPKA); Enclosure Color Shall be Green	4/L3.1
Pipes				
(heavy dashed line)	Schedule 40 PVC	Mainline Pipe	2 Inch Size; Controller Wire Shall be Tucked Under Mainline; Sch 80 Fittings Shall be Used for Mainline Connections	6/L3.1
(thin line)	Schedule 40 PVC	Lateral Line Pipe	See Plan for Pipe Sizes, Pipes Unmarked Shall be 1 Inch; Minimum Pipe Size Shall be 1 inch for PVC Pipe; Sch 40 Fittings Shall be Used for Lateral Line Connections	6/L3.1
Controller				
C	Rain Bird ESPLXME2 Rain Bird IQ-PSCM-LXM Rain Bird LXMMSS & LXMMSSPED	12 Station Base Controller with Pro Smart IQ Connection Module Installed in a Stainless Steel Cabinet and Pedestal	See Plan for Location of Controller; Coordinate Power Supply With Building Electrical Contractor; Provide Zone Map with Controller; Coordinate with AFCU in Purchasing and Installing WIFI Module	9/L3.1
Sleeving				
= = =	Schedule 40 PVC	Provide for irr. Mainlines, Laterals and Controller Wire Located Under Concrete and Asphalt Paving at Specified Depths	Contractor Shall Coordinate the Installation of Sleeving with the Installation of Concrete Flatwork and Asphalt Paving; All Sleeving Shall be by the Landscape Contractor Unless Otherwise Noted	3/L3.1

Valve Callout — Valve Number / Valve Flow / Valve Size

VALVE SCHEDULE

VALVE #	Remote Control Valve	VALVE SIZE	IRRIGATION TYPE	FLOW (GPM)	PSI @ VALVE	PSI @ POC	PRECIP RATE
1	Rain Bird PEB	2"	Turf Rotor	42.36	44.0	62.9	0.4 in/h
2	Rain Bird PEB	2"	Turf Rotor	28.24	42.2	57.5	0.85 in/h
3	Rain Bird PEB	2"	Turf Rotor	28.24	42.2	55.1	0.87 in/h
4	Rain Bird PEB	2"	Turf Rotor	35.3	44.3	56.3	0.4 in/h
5	Rain Bird PEB	2"	Turf Rotor	35.3	44.1	56.0	0.4 in/h
6	Rain Bird PEB	2"	Turf Rotor	28.24	41.0	53.0	1.11 in/h
7	Rain Bird PEB	2"	Turf Rotor	28.24	42.9	55.5	0.4 in/h
8	Rain Bird PEB	2"	Turf Rotor	35.3	41.8	54.8	0.79 in/h
9	Rain Bird PEB	2"	Turf Rotor	35.3	43.9	56.9	0.4 in/h

General Irrigation Notes:

1. Prior to construction, the contractor shall be responsible for locating all underground utilities and shall avoid damage to all utilities during the course of the work. It shall be the responsibility of the contractor to protect all utility lines during the construction period, and repair any and all damage to utilities, structures, site appurtenances, etc. which occurs as a result of the landscape construction.
2. The irrigation contractor shall examine the site conditions under which the work is to be performed and notify the general contractor in writing of unsatisfactory conditions. Do not proceed until conditions have been corrected.
3. The contractor shall provide all materials, labor and equipment required for the proper completion of all irrigation work as specified and shown on the drawings.
4. See civil drawings for all hardscape, grading, and drainage information.
5. Contractor safety and cleanup must meet OSHA standards at all times. All contractors must have adequate liability, personnel injury and property damage insurance. Clean-up must be performed daily, and all hardscape areas must be washed free of dirt and mud on final cleanup. Construction must occur in a timely manner.
6. The Owner/Landscape Architect has the right to reject any and all irrigation material not conforming to the plans and specifications.
7. The contractor shall install all irrigation material per plan, notes and details.
8. Irrigation system components must be premium quality only and installed to manufactures requirements and specifications. The contractor is responsible for checking state and local laws for all specified materials and workmanship. Substitutions must be approved by landscape architect. Provide owner and maintenance personnel with instruction manual and all products data to operate, check, winterize, repair, and adjust system.
9. Irrigation installer shall repair or replace irrigation components and accessories that fail in materials and workmanship within specified warranty period. The warranty shall be 12 months and shall begin with final project acceptance.
10. Irrigation system check must be done before the system is backfilled. Irrigation mainline and each control valve section must be flushed and pressure checked. Assure the complete system has no documented problems and full head to head coverage with adequate pressure for system operation. Adjust system to avoid spray on building, hardscape, and adjacent property. Any problems or plan discrepancies must be reported to the landscape architect.
11. Irrigation laterals must be schedule 40 P.V.C. with schedule 40 fittings, one (1) inch minimum size. Solvent weld all joints as per manufactures specifications for measured static p.s.i. Teflon tape all threaded fittings. The minimum depth of lateral lines shall be twelve (12) inches. Adapt system to manual compression air blowout.
12. Irrigation mainline that are 2" and smaller mainlines shall be schedule 40 PVC pipe with schedule 80 fittings. Solvent weld all joints as per manufactures specifications for measured static pressure. Use teflon tape on all threaded joints. Line depth must be twenty-four (24) inches minimum.
13. Design locations are approximate. Make minor adjustments necessary to avoid plantings and obstructions such as signs and light standards. Maintain 100(%) percent irrigation coverage of areas indicated.
14. Controller valves to be grouped together wherever possible. Install valve boxes with long side perpendicular to walk, curb, lawn, building or landscape features. Valve boxes to conform with finish grades.
15. Control valve wire shall be #14 single conductor: white for common wire, red for hot wire and blue for the spare wire. Provide (2) two spare wires that runs the length of the mainline and to the controller. All wiring shall be UF-UL rated. All connections shall be made with water tight connectors (DBR/Y) and contained in control valve boxes. Provide 36" extra wire length at each remote control valve in valve box. Install control wiring with main service line where possible. Provide slack in control wires at all changes in direction.
16. Control valve size, type, quantity, and location to be approved by landscape architect. Install in heavy duty plastic vandal proof box. Size boxes according to valve type and size for ease of maintenance and repair. Install one (1) cubic feet of pea gravel for sump in base of boxes. Boxes shall be Carson Brooks.
17. Quick couplers shall be a Rain Bird 44RC with a (one) 1 inch swing joint assembly. Support with rebar in each retainer lug. Install where shown on the plans.
18. Irrigation system backfill must occur only after system check is completed as specified. Use only rock free clean fill around pipes, valves, drains, or any irrigation system components. Water settle all trenches and excavations.
19. All irrigation pipe running through walls, under sidewalk, asphalt, or other hard surface shall be sleeved prior to paving. It is the irrigation contractors responsibility to coordinate sleeving with concrete and pavement contractors. Sleeves will be schedule 40 P.V.C. The depth for mainline sleeves shall be twenty-two (28) inches minimum. Depth for lateral sleeves shall be sixteen (16) inches minimum. Sleeves shall be a minimum of two sizes larger than the pipe to be sleeved. All valve wiring shall be contained in separate sleeving.
20. Plans are diagrammatic and approximate due to scale. where possible, all piping is to be installed within lanscape areas. No tees, ells, or changes in direction shall occur under hardscape.
21. It is the contractors responsibility to verify all quantities based upon the plan prior to completion of a construction cost estimate.
22. The irrigation contractor shall flush and adjust all rotor heads for optimum performance and to prevent possible overspray onto walks, roadways, and/or buildings as much as possible. This shall include selecting the best degree of arc to fit the site and to throttle the flow control of each valve to obtain the optimum operating pressure for each system. All mainlines shall be flushed prior to the installation of irrigation heads.
23. All rotors heads shall be set perpendicular to finish grade of the areas to be irrigated and shall be installed 6-8" from buildings walls, or within 4" of pavement, curbs, or header edges.
24. Electrical power source at the controller location shall be provided by electrical contractor. Contractor shall verify location of controller prior to installation with owner.
25. The irrigation system design is based on the operating pressure shown on the irrigation drawings. The irrigation contractor shall verify water pressure prior to any construction. Report any difference between the water pressure indicated on the drawings and the actual pressure reading at the point of connection to the owner's authorized representative immediately.
26. Provide and install all manufacturer's recommended surge and lighting protection equipment on all controllers.
27. All lines shall slope to manual drains (see details). If field conditions necessitate additional drains, these drains shall be installed for complete drainage of the entire system. Provide a gravel sump under each drain. All drains shall be a minimum of 6" below grade.
28. Upon completion and approval of irrigation system, irrigation contractor to provide the owner with one set of drawings indicating actual location of piping, valves, rotor heads, wiring, and zones.
29. An irrigation zone map shall be provided in a protective jacket and be kept with the main irrigation controller. The map shall show all approved irrigation and include all zone valve locations.

811 Know what's below. Call before you dig.

REV	DATE	DESCRIPTION

Designed by: SY
Drafted by: JW
Client Name: EM Commercial, LLC
24-078 IR

AWA
2010 North Redwood Road Salt Lake City, Utah 84116
(801) 521-8529 · AWAengineering.net

Irrigation Plan

The Marketplace at Eagle Mountain Town Center Phase 4
Eagle Mountain Boulevard & Pony Express Parkway
Eagle Mountain, Utah

State of Utah — Licensed Landscape Architect — 06/26/2025

26 Jun, 2025

SHEET NO. **L2.1**

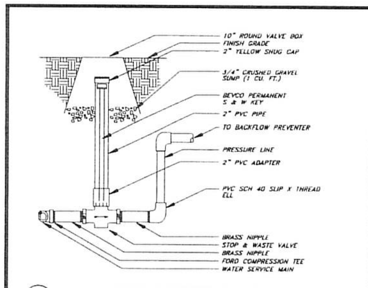

1 STOP & WASTE VALVE
NOT TO SCALE

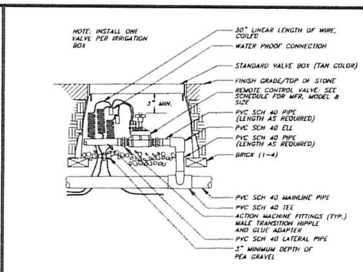

2 REMOTE CONTROL VALVE
NOT TO SCALE

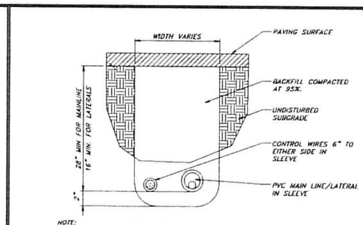

NOTE:
1. ALL IRRIGATION SLEEVES TO BE SCH. 40 PVC PIPE.
2. ALL SLEEVES SHALL BE TWICE THE NOMINAL SIZE OF THE PIPE WITHIN.
3. ALL JOINTS TO BE SOLVENT WELDED AND WATERTIGHT.
4. SLEEVE TO BE RUN UNDER PAVEMENT AND EXTEND A MIN. OF 18" PAST EDGE OF PAVEMENT. END OF SLEEVE TO BE CAPPED AND MARKED.

3 PIPE SLEEVING
NOT TO SCALE

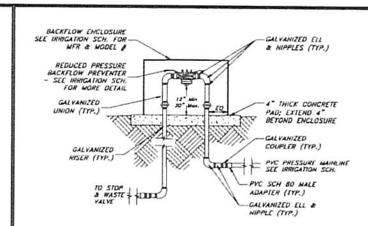

NOTE:
1. DIAMETER OF FITTINGS, NIPPLES AND RISERS SHALL BE EQUAL DIAMETER OF SPECIFIED BACK-FLOW PREVENTER UNLESS NOTED OTHERWISE.
2. ENCLOSURE SHALL BE BOLTED DOWN ON EACH CORNER.

4 BACKFLOW PREVENTION DEVICE
NOT TO SCALE

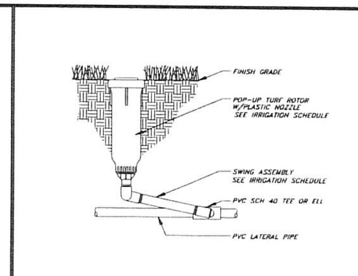

5 POP-UP ROTOR
NOT TO SCALE

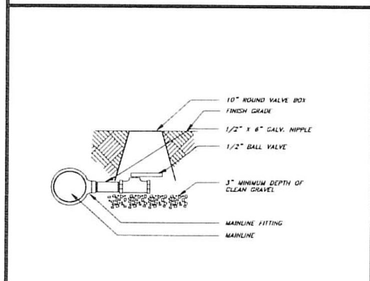

6 MANUAL DRAIN VALVE
NOT TO SCALE

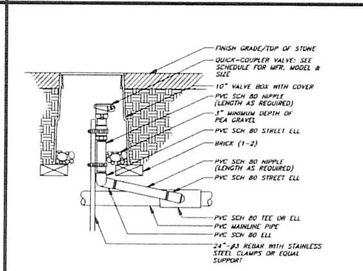

7 QUICK COUPLING VALVE
NOT TO SCALE

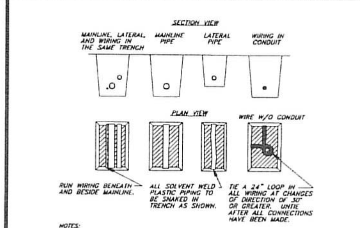

NOTES:
1. SLEEVE BELOW ALL HARDSCAPE ELEMENTS WITH SCH. 40 PVC PIPE TWICE THE DIAMETER OF THE PIPE OR WIRE BUNDLE WITHIN.
2. FOR PIPE AND WIRE BURIAL DEPTHS SEE IRRIGATION NOTES.

8 PIPE & WIRE TRENCHING
NOT TO SCALE

NOTES:
1. FOR EASE OF INSTALLATION, A JUNCTION BOX SHALL BE INSTALLED AT THE BASE OF THE CONTROLLER FOR CONTROLLERS NEEDING 24 OR MORE STATIONS.
2. PROVIDE PROPER GROUNDING COMPONENTS TO ACHIEVE GROUND RESISTANCE OF 10 OHMS OR LESS.

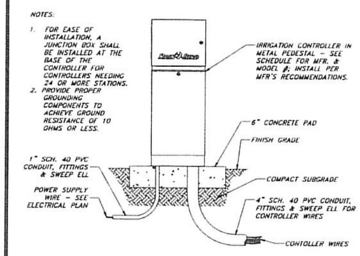

9 IRRIGATION CONTROLLER IN PEDESTAL
NOT TO SCALE

Know what's below.
Call before you dig.

REV	DATE	DESCRIPTION

Designed by: SY
Drafted by: JW
Client Name:
EM Commercial, LLC
24-078 IR

ANA
2010 North Redwood Road, Salt Lake City, Utah 84116
(801) 521-8529 · AWAengineering.net

Landscape & Irrigation Details

The Marketplace at Eagle Mountain Town Center Phase 4

Eagle Mountain Boulevard & Pony Express Parkway
Eagle Mountain, Utah

State of Utah — Licensed Landscape Architect — 06/26/2025

26 Jun, 2025

SHEET NO.
L3.1